CAMERON

DEMCO Gate Valves

Dependability, in-line repairability, flexible trim options and drop-tight, position shutoff

TECHNOLOGY

CAMERON

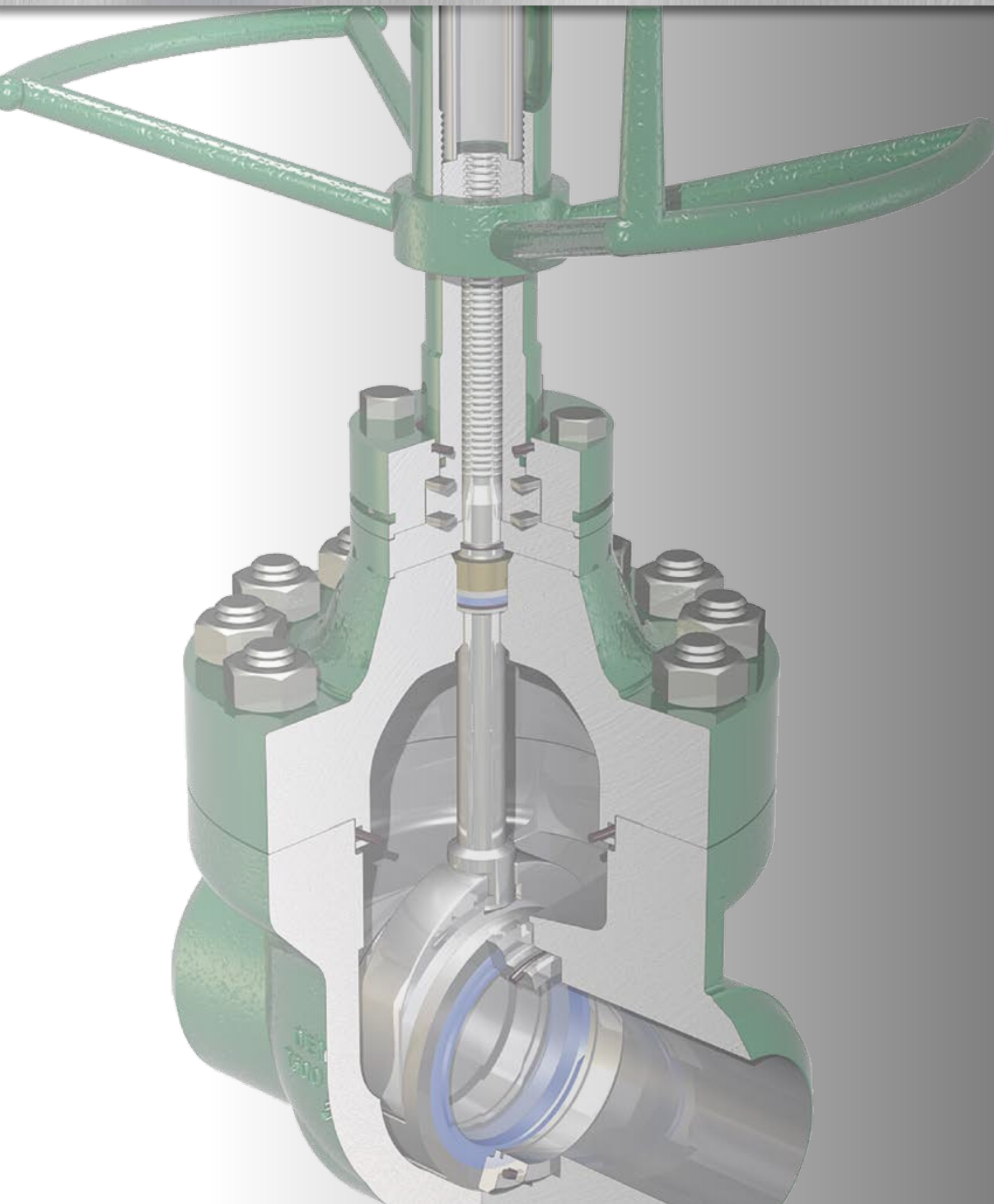

Table of Contents

DEMCO GATE VALVES

Introduction 2

Series DM Gate Valves 3

Series DM 1000 to 5000 psi Gate Valves 4

Series DM 7500 psi Gate Valves 5

Series DT/DB Gate Valves 7

Enhanced Oil Recovery Accessories 9

Product Specifications

- General Technical Information 10

Dimensions and Materials/Parts List

- Series DM 7500 Gate Valves – 7500 psi WP 12
- Series DM Gate Valves – 2000, 3000, and 5000 psi WP 22
- Series DM Gate Valves – ASME Class 600 34
- Series DM Gate Valves – ASME Classes 900 and 1500 38
- Series DT Gate Valves – ASME Classes 600, 900, and 1500 42

Services for Valves and Actuation 52

Trademark Information 53

DEMCO Gate Valves

Oklahoma City, Okla., USA

Cameron is a leading provider of valves, valve automation, and measurement systems to the oil and gas industry. Our products are primarily used to control, direct, and measure the flow of oil and gas as it is moved to refineries, petrochemical plants, and industrial centers for processing.

We provide valve products that are sold through distributor networks worldwide for use in both oil and gas and industrial applications and include such widely recognized brands as DEMCO®, NAVCO®, NEWCO®, NUTRON®, THORNHILL CRAVER®, TECHNO™, TOM WHEATLEY®, WHEATLEY®, and WKM®.

Cameron's DEMCO gate valves are the valves of choice, engineered and proven for drilling and production industries. Designed for dependable, heavy-duty performance in abrasive and corrosive service conditions, DEMCO gate valves are commonly selected for a number of oilfield applications.

SERIES DM GATE VALVES

Cameron's DEMCO Series DM gate valves, the premier gate valve in the oil and gas drilling market, are specifically engineered for the rigorous requirements of oilfield applications. Designed for dependable, heavy-duty performance in abrasive service conditions, DEMCO DM gate valves are commonly selected for a number of oilfield applications, including:

- Drilling standpipe manifold
- Pump manifold block valves
- High-pressure mud mixing lines
- High-pressure drilling system block valves

The DEMCO Series DM gate valves are available in ASME Classes 600, 900, and 1500. They also are available in API working pressures 2000, 3000, and 5000 psig (not API monogrammed).

Features and Benefits

In-Line Field Repairability

The bonnet is easily removed for internal parts inspection and/or replacement without removing the valve from the line. This design simplicity permits fast and easy service without the need for special tools.

Flexible Trim Offerings

Optional materials for stems, gates, seat inserts and seat elastomers make it easier to trim valves for a wide range of service conditions. Three internal plastic coatings for the body and bonnet are offered to improve resistance to wear and corrosion.

Double Acting Thread Design for Fast Operation

A. The ASME series double acting thread design contains a threaded stem in the gate working with threads in the bonnet and handle assembly. Stems are polished and include a dependable O-ring and anti-extrusion seal. This unique design is economical and effective. Note: the 4" (100 mm) ASME Class 1500 valve is a double acting, rising stem design, similar to the 4" (100 mm) 3000 psi valve.

B. The DM 2000, 3000, and 5000 psig working pressure valves contain double acting threads working together in a specially designed stem screw, screw housing, and stem arrangement. Note: the 4" (100 mm) and larger 5000 psi valve is a single-thread, heavy-duty, rising stem design with bearings.

C. The rising stem design protects the stem threads from the lading.

D. Larger DM 3000 and 5000 psi gate valves include a sight lens to view the stem for determining gate position.

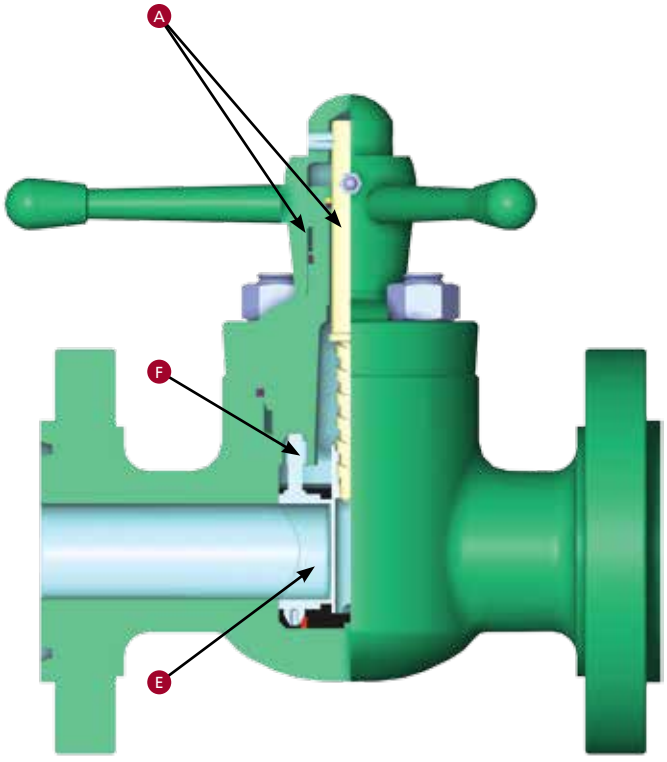

Series DM 3" (80 mm) ASME 900/1500 Gate Valve

SERIES DM 1000 TO 5000 PSI GATE VALVES

Exclusive Seat Design for Drop-Tight Sealing

The DEMCO Series DM gate valve seat uses a unique design to provide a drop-tight shutoff in abrasive and erosive service.

E. The seat consists of two identical metal wear rings encapsulated in elastomer to form a cylindrical shape with a gate slot and two round ports. The closed gate bears on the downstream wear ring, while the elastomer provides a drop-tight pressure-responsive seal around the port.

F. The cylindrical seat assembly fits into the machined body cavity and is expanded outward toward the valve ports by the bonnet and spread ring in the bottom of the seat. The expansion occurs when the bonnet is tightened onto the body while engaging the seat pin extensions from both wear rings. The spread ring ensures the seat elastomer presses uniformly against the body bore. This design ensures the seat seals tight against the body and around each valve port. This design has proven to be effective even if the gate and seat ring become scored or abraded during service. When it comes time for maintenance, the seat's single-piece design makes it easy to pull out of the body for replacement.

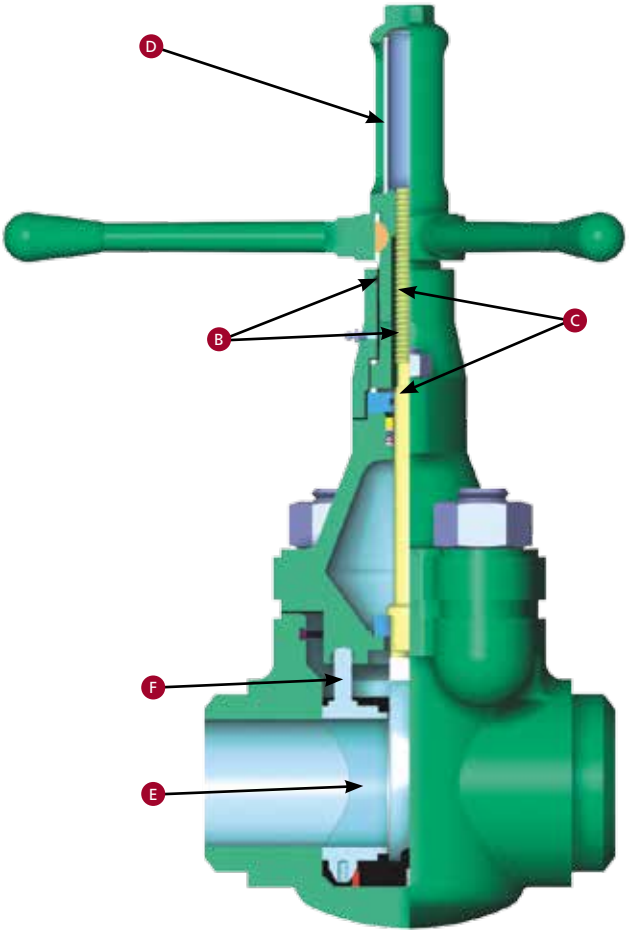

Series DM 4" (100 mm) 5000 WP
Gate Valve (Four-Bolt Design Shown)

For proper valve repair, use Cameron's DEMCO replacement parts.

Features and Benefits

In-Line Field Repairability

The bonnet is easily removed for internal parts inspection and/or replacement without removing the valve from the line. This design simplicity permits fast and easy service without the need for special tools.

Heavy-Duty Roller Bearings

Heavy-duty stem roller bearings reduce torque on 4" (100 mm) and larger valves.

Floating Slab Gate Design

A slab gate with a "T" slot stem connection allows the gate to float to the seat, providing a tighter pressure-responsive seal.

A. **Unique, abrasion resistant, one-piece seat design**
The seat assembly consists of two stainless steel insert/support rings to which a resilient elastomer is permanently bonded. The elastomer provides tight shutoff after long use in abrasive service. The stainless steel rings are corrosion and erosion resistant. The one-piece design makes field replacement easier.

B. **Locking seat alignment**
The seat assembly is engineered with a metal lock shell that aligns the seat in the bottom of the valve. This design ensures accurate seat alignment with reduced resistance to flow.

C. **Body wear rings**
Surface hardened alloy body wear rings back up both sides of the seat. These rings extend the service life of the valve by absorbing erosive wear that can cause damage to the body around the seat bore area.

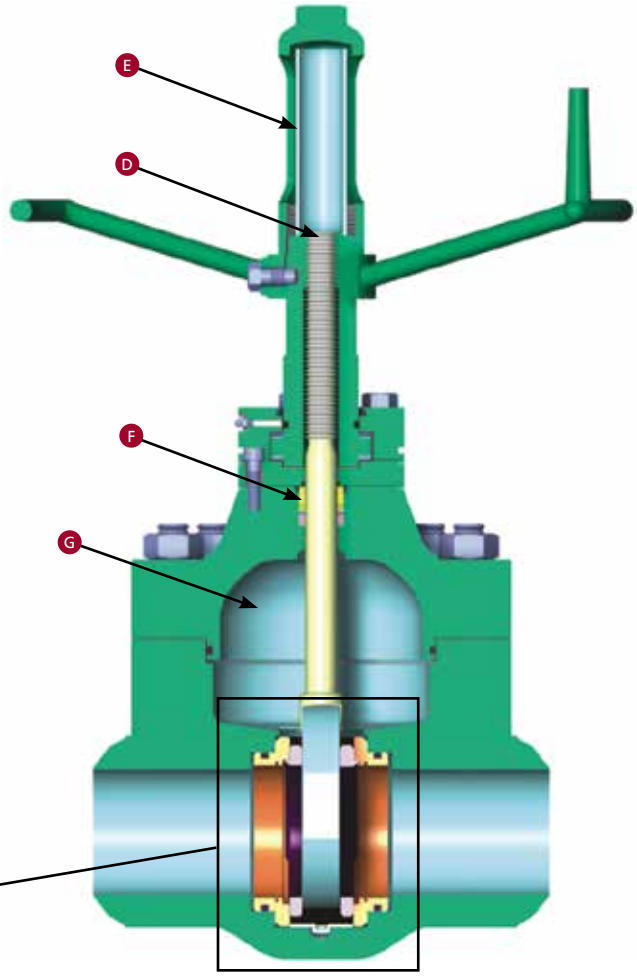

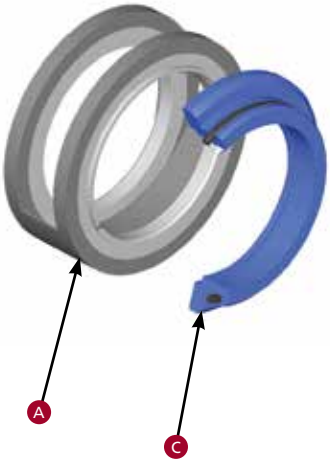

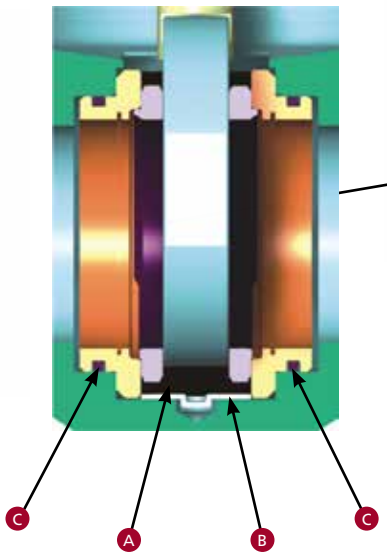

D. Rising stem design
The DEMCO DM 7500 gate valve uses a rising stem design that isolates and protects the threads from the line medium. The rising stem also indicates gate position.

E. Visual position indicator lens
On 3" (80 mm) and larger valves, a clear position indicator lens allows the operator to easily determine whether the valve is open or closed. The indicator lens also helps to protect the stem threads from the elements.

F. Replaceable stem packing
The stem packing can be replaced without removing the bonnet from the valve, 3" to 6" (80 mm to 150 mm), saving time when this maintenance may be required. Note: line and valve pressure must be relieved before performing this maintenance.

G. Flow cleansed design
The body cavity area is designed to allow continuous flushing by the fluid flow. This action prevents the valve from sanding up, even in standpipe installations.

DM Series Pressure Classes and Sizes

Size	in.	(mm)	600	900	1500	1000	2000	3000	5000	7500
RP	2" x 1-1/2"	(40)	•							•
FP	2	(50)	•	•	•		•	•	•	•
FP	2-1/2	(65)	•	•	•		•	•		
FP	3	(80)	•	•	•		•	•	•	•
FP	4	(100)	•	•	•		•	•	•	•
FP	5	(125)				•		•	•	•
FP	6	(150)	•	•						
RP	2 x 1-1/2	(50 x 40)	•							
RP	2-1/2 x 2	(65 x 50)					•	•	•	
RP	3 x 2	(80 x 50)	•							
RP	4 x 3	(100 x 80)						•	•	•
RP	5 x 4	(125 x 100)						•	•	•
RP	6 x 4	(150 x 100)							•	
RP	6 x 5	(150 x 125)							•	•
RP	8 x 6	(200 x 150)	•							

SERIES DT/DB GATE VALVES

Cameron's DEMCO Series DT/DB gate valves are recognized for their quality design, rugged dependability, and corrosion resistance, particularly for use in waterflood and CO_2 applications.

DEMCO aluminum bronze and stainless steel valves and accessories are designed specifically for the demanding requirements of corrosive CO_2 injection and waterflood applications in the enhanced oil recovery market.

- The handle moves up and down on the bonnet, or the top of the stem is visible during operation, providing visible aid to determine whether the valve is open or closed.

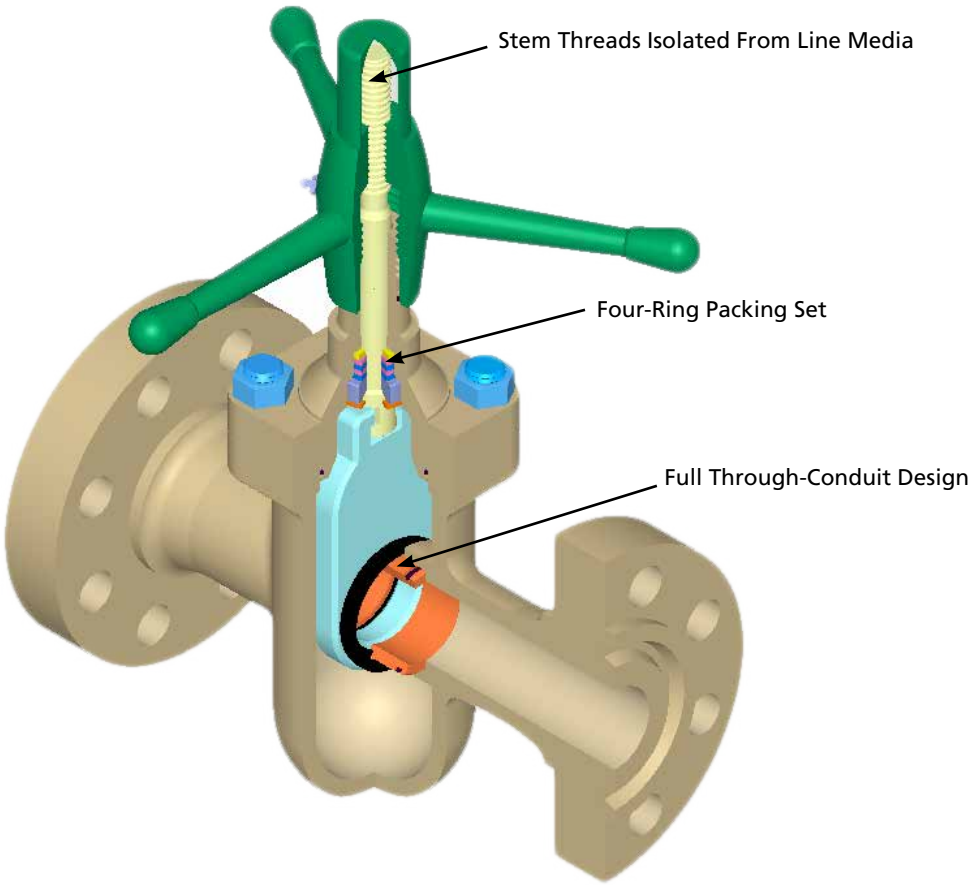

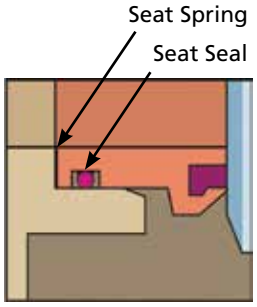

SEAT ASSEMBLY DETAIL
P-10
(SEAT/SEAL OPTION 6)
SEAT SPRING AND SEAL
PART OF SEAT ASSEMBLY

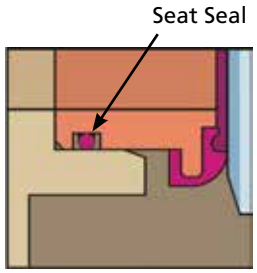

SEAT ASSEMBLY DETAIL
PEROXIDE-CURED BUNA-N
OR FKM
(SEAT/SEAL OPTION 1 OR 2)
SEAT SEAL PART OF SEAT
ASSEMBLY

SEE PAGES 36 THROUGH 43 FOR MATERIAL SPECIFICATIONS

Optional Materials:

DT Series:
- SS Body and Bonnet, FKM or P-10 Seats

DB Series:
- FKM Seat Elastomer
- Peroxide-Cured Buna-N

DT and DB Series Pressure Classes and Sizes

DT Series Threaded and Flanged						
Size	in.	(mm)		ASME Class 600	ASME Class 900	ASME Class 1500
FP	2	(50)		•	•	•
FP	2-1/2	(65)		•	•	•
FP	3	(80)		•	•	•
FP	4	(100)	(Flanged Only)	•	•	•
FP	6	(150)	(Flanged Only)		•	•
DB Series Valves (Consult Cameron for Drawings)						
FP	6	(150)		•	•	•
RP	8 x 6	(200 x 150)		•	•	

Features and Benefits

In-Line Field Repairability

The bonnet is easily removed for internal parts inspection and/or replacement without removing the valve from the line. This design simplicity permits fast and easy service without the need for special tools.

Corrosion-Resistant Materials are Standard

Body and bonnet materials, as well as all internal wetted parts, comply with NACE RP-0475.

Rising Stem Design

The handle moves up and down on the bonnet, or the top of the stem is visible during operation, providing visible aid to determine whether the valve is open or closed.

A. **Pressure-responsive drop-tight sealing**
Standard seats consist of 316 SS seat rings encapsulated with peroxide-cured Buna-N elastomer to provide reliable, drop-tight sealing for extended service life.

B. **Superior abrasion resistance**
Buna-N elastomer encapsulated seats also provide an excellent deterrent to abrasion, further enhancing extended service life.

C. **Four-ring stem packing set**
The DEMCO Series DT stem seal design uses four packing rings, preventing leakage into the stem journal and outside the valve.

D. **Through-conduit gate design**
Full through-conduit design ensures non-turbulent flow and gate alignment for improved valve performance and longer service life.

E. **Non-wetted stem thread design**
The DEMCO stem design isolates corrosive lading from contacting stem threads, preventing stem seizure and ensuring long, trouble-free valve performance.

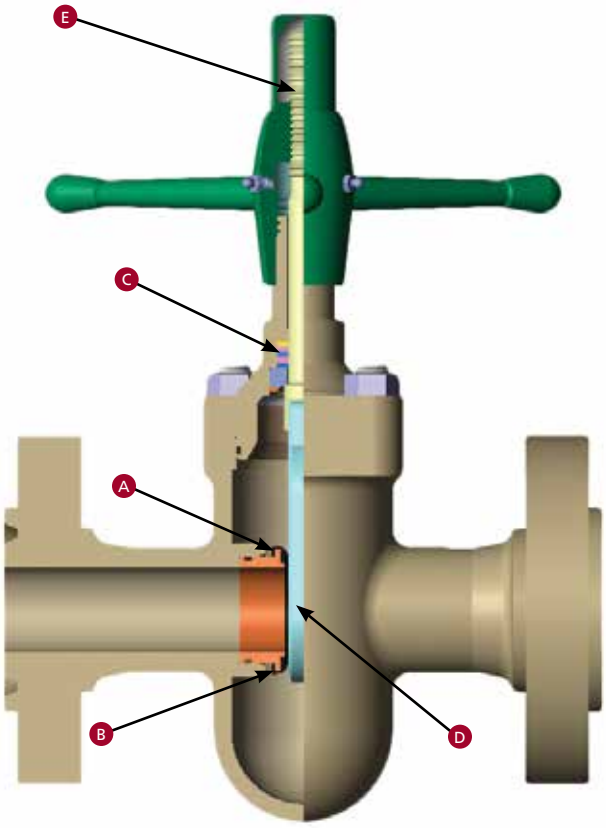

Series DT Gate Valves

For proper valve repair, use Cameron's DEMCO replacement parts.

Series DB Gate Valve

The DEMCO Series DB gate valve is available for the large 6" (150 mm) and 8" (200 mm) pipe sizes in the enhanced oil recovery market. These valves also feature an aluminum bronze body and bonnet as standard. Internal parts are 316 SS. The exclusive seat design of the DEMCO Series DB gate valve is the same proven design found in the DEMCO Series DM gate valve. The seat consists of two identical metal wear rings encapsulated in elastomer to form a cylindrical shape with a gate slot and two round ports. The closed gate bears down on the downstream wear ring, while the elastomer provides a drop-tight pressure-responsive seal around the port. This design provides an effective seal even if the gate and seat ring become scored or abraded during service. The DEMCO Series DB gate valve also is field repairable while the valve is in-line.

Flow Tees

ENHANCED OIL RECOVERY ACCESSORIES

Accessories

Ball check valves, flow tees, and strainers are available to complete requirements for an entire injection assembly.

F. Ball Check Valves
G. Flow Tees
H. Strainers

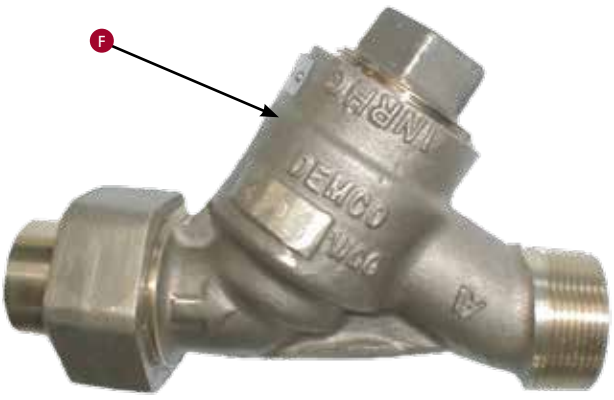

Ball Check Valves

Strainers

Product Specifications

SERIES DM, DT, AND DB GATE VALVES
GENERAL TECHNICAL INFORMATION

Valve Size Designations and Weld End Dimensional Information

1. All references to pipe size in this catalog are the nominal size.
   The actual OD and ID for various nominal sizes and schedules are tabulated below.
   Weld end bodies are machined at each end to match the pipe OD and ID.

Nominal Size			ID			
in.	(mm)	OD	Sch 40	Sch 80	Sch 160	XXH
1-1/2	(40)	1.900	1.610	1.500	-	-
2	(50)	2.375	2.067	1.939	1.687	1.503
2-1/2	(65)	2.875	2.469	2.323	2.125	1.771
3	(80)	3.500	3.068	2.900	2.624	2.300
4	(100)	4.500	4.026	3.826	3.438	3.152
5	(125)	5.563	-	4.813	4.313	4.063
6	(150)	6.625	6.065	5.761	5.187	4.897

2. Reduced port valve size descriptions are designated by two numbers.
   The first number is the nominal size of the end connection.
   The second number is the ID of the valve seat (dimension "C" in the tables).

PRESSURE RATINGS

DEMCO gate valves are designed for the maximum working pressures and test pressures tabulated below.

ASME Class 600	ASME Class 900	ASME Class 1500	1000	2000	3000	5000	7500
			WP	WP	WP	WP	WP
1480 WP	2220 WP	3705 WP	1000 WP	2000 WP	3000 WP	5000 WP	7500 WP
2225 Test	3350 Test	5575 Test	2000 Test	4000 Test	6000 Test	7500 Test	11,250 Test

Gate valve rating must be selected to match the piping system in which the valve will be installed. Tabulated below are working pressures at 100° F (38° C) for ASTM A106 Grade B and AISI 4130 60K minimum yield pipe in sizes corresponding to DEMCO gate valves.

Size		ASTM A106 Grade B				4130 60k Min. Yield
in.	(mm)	Sch 40	Sch 80	Sch 160	XXH	XXH
1-1/2	(40)	1340	2430	-	-	-
2	(50)	1210	2220	4300	5970	10,234
2-1/2	(65)	1620	2590	3950	6590	-
3	(80)	1460	2370	3930	5880	10,080
4	(100)	1300	2130	3830	5150	8826
5	(125)	-	1970	3730	4650	7971
6	(150)	1110	1970	3650	4724	8098
8	(200)	1030	1790	-	-	-

Quality, Inspections and Testing

- Cameron's quality system is based on ISO 9000 and API Q1 requirements and is ISO 9001:2008 certified. Cameron's Quality department monitors all phases of valve production, from material receipt to final inspection, including a liaison with third-party inspectors and certifying authorities.

  All DEMCO gate valves are hydrostatically tested; stem seal, body and seat are inspected for zero leakage under pressure before being released for shipment. Hydrotest specifications are based upon API 6A latest edition testing requirements; DEMCO Series DM 7500 group 2 and 3 valves undergo additional test cycles, including low-pressure seat tests prior to being released for shipment.

Certifications

- DEMCO DM 5000 Gate Valves 2" to 5" are available with ABS Type approval upon request.
- DEMCO DM 7500 Gate Valves 2" to 5" are available with ABS or DNV Type approval upon request.

Seat Seal Options

- **Buna-N (Nitrile)**
  Is excellent for petroleum oil and gases, fuel oils, and alcohols from -10° F to 200° F (-23° C to 93° C).
- **FKM**
  Highly resistant to mineral acids and hydrocarbons and resists moderate concentrations of H_2S. Serviceable from -10° F to 400° F (-23° C to 204° C). (Not suitable for steam).
- **HNBR**
  Formulated for use with synthetic and oil-based drilling mud service from -20° F to 250° F (-29° C to 121° C).

Coatings – DM Gate Valves Only

- **DEMCO 12 (Internal Coating only)**
  A baked-on phenolic epoxy, tougher and more abrasion resistant. Excellent for service in caustics and saltwater up to 200° F (93° C).
- **ENDURO-BOND™ (For Internal and External use)**
  An engineered dry powder coating process for metal surfaces that provides a protective barrier against corrosion and abrasive wear. Coating thickness is from 1 to 4 mil; is superior to plastics, epoxies and ceramics; and has a high heat resistance to 800º F (427º C).

Ordering Information

- Give size, pressure class, and end connection.
- Specify pressure class of flanged ends, raised face (RF), or ring type joint (RTJ).
- For threaded ends, provide type of pipe:

TBG (non-upset tubing)	LCSG (long casing thread)
UPTBG (external upset tubing)	CSG (short casing thread)

- For weld ends, give schedule of mating pipe.
- For applications in high-pressure gas above 3000 psi or involving concentrations of H_2S or CO_2, consult Cameron for recommendations.

Dimensions and Materials/Parts List

SERIES DM 7500 GATE VALVES – 7500 PSI WP

2″ (50 mm) XXH with 1-1/2″ (40 mm) Bore

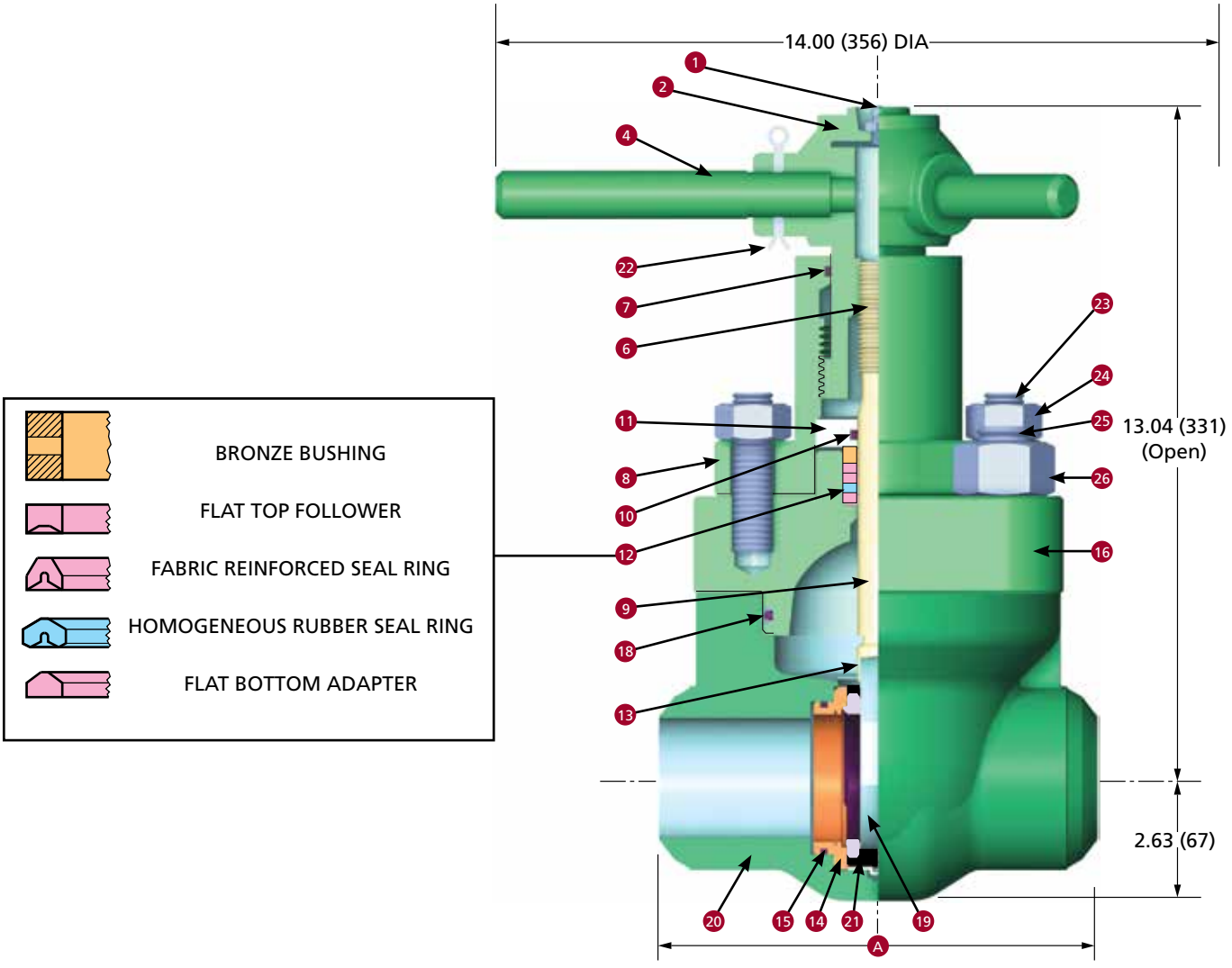

Dimensional Data and Weights

Dimension		Valve Size: 2″ (50 mm) RP 7500 WP
A	Weld End	9.00 (229)
Valve Seat ID		1.50 (40)
Number of Handle Turns from Open to Closed		7.00
Weight lb (kg)		
	Weld End	76 (34)

ASSEMBLY PART NUMBER

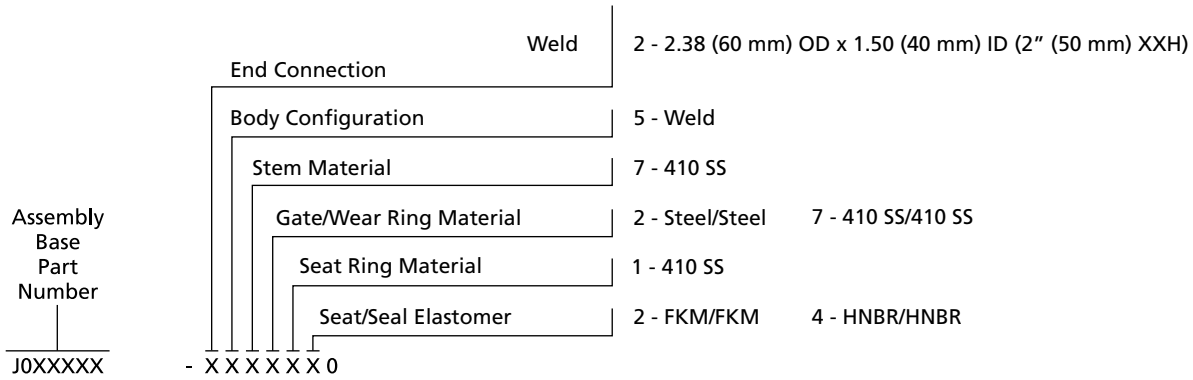

Group 1 Basic valve. Hydrostatic shell test: 11,250 psi for three minutes. Hydrostatic seat test: 7500 psi for three minutes, each side. Material traceability on body and bonnet.

Group 2 Same as Group 1, except: Hydrostatic shell test: 11,250 psi for three minutes, drop to 0 psi, then 11,250 psi for 15 minutes. Test is charted. Hydrostatic seat test: 7500 psi for three minutes, drop to 0 psi, 7500 for 15 minutes, drop to 0 psi, then 300 psi for five minutes, each side. Test is charted. Material traceability on body, bonnet, stem, and bolting. Impact tests at or below -50° F (-46° C) on body, bonnet, stem and bolting. Surface NDE on body, bonnet and stem.

Group 3 Same as Group 2, plus volumetric NDE on body and bonnet.

Parts List

	Key No.	Qty.	Description		Valve Size: 2" (50 mm) RP Group 1	Group 2	Group 3
			Assembly Base Number	XXH Weld End: General Service	J025196	J025197	J025217
				XXH Weld End: NACE Compliant	J025200	J025201	J025218
	1	1	Lube Fitting	Steel	005929-18		
	2	1	Handle	Ductile Iron ASTM A536 Grade 65-45-12	2139712-01		
	4	1	Lock Handle	AISI C-1213	J001891		
■	6	1	Stem Screw	AISI C-1213	J001913		
■	7	1	Housing Seal	Buna-N	J005526-224		
	8	1	Screw Housing	ASTM A350 Grade LF2 Class 1	J024982		
■	9	1	Stem	410 SS	2269413-01		
■	10	1	Secondary Seal	HNBR	2712425-13		
				FKM	J005531-210		
	11	1	Packing Retainer	AISI C-1213	J001940	-	
				17-4 PH SS	-	J021432	
■	12	1	Stem Seal Assembly	HNBR	J023231-008		
			(With Bronze Bushing – ASTM B505 Alloy 93200)	FKM	J023231-006		
■•	13	1	Gate Clip	AISI 302 SS	M450480		
■•	14	2	Body Wear Ring	For Steel Gate, AISI 4140 w/QPQ Nitride Coating	2269414-01		
				For SS Gate, AISI 410 Stainless Steel	2269414-02		
■•	15	2	Wear Ring Seal	HNBR	2712425-18		
				FKM	J005521-225		Consult Cameron for Part Numbers
	16	1	Bonnet	ASTM A487 Grade 4 Class D	J024985-030	2140428-01	
■•	18	1	Bonnet Seal	HNBR	2712425-60		
				FKM	J005521-342		
■•	19	1	Gate	Steel AISI 4140 w/QPQ Nitride Coating	2269412-01		
				410 SS	2269412-02		
	20	1	Body Materials	Weld End – ASTM A487 Grade 4 Class D	Consult Cameron Body Part Numbers		
■•	21	1	Seat	Rings: AISI 410 SS; Elastomer: HNBR	2269403-01		
				Rings: AISI 410 SS; Elastomer: FKM	2269403-02		
	22	1	Cotter Pin	Steel	J005420-18728		
	23	2	Housing Stud		J002066	J021436	
				Materials	ASTM A193 Grade B7	ASTM A193 Grade L7	
	24	2	Housing Stud Nut		2709000-08-01	J053252-034	
				Materials	ASTM A194 Grade 2H	ASTM A194 Grade 7	
	25	4	Body Stud		J015432	J021442	
				Materials	ASTM A193 Grade B7	ASTM A193 Grade L7	
	26	4	Body Stud Nut		2709000-10-01	J053252-038	
				Materials	ASTM A194 Grade 2H	ASTM A194 Grade 7	

■ Major repair kit J025177-11574 – One each for one year of service.

• Minor repair kit J025177-01574.

Major and minor repair kits listed for trim option J0XXXXX-XX72140 (410 SS Stem, Steel/QPQ Gate, HNBR Seat/Seals)
Consult Cameron for optional repair kit trim options

SERIES DM 7500 GATE VALVES – 7500 PSI WP

2″ (50 mm) Full Port

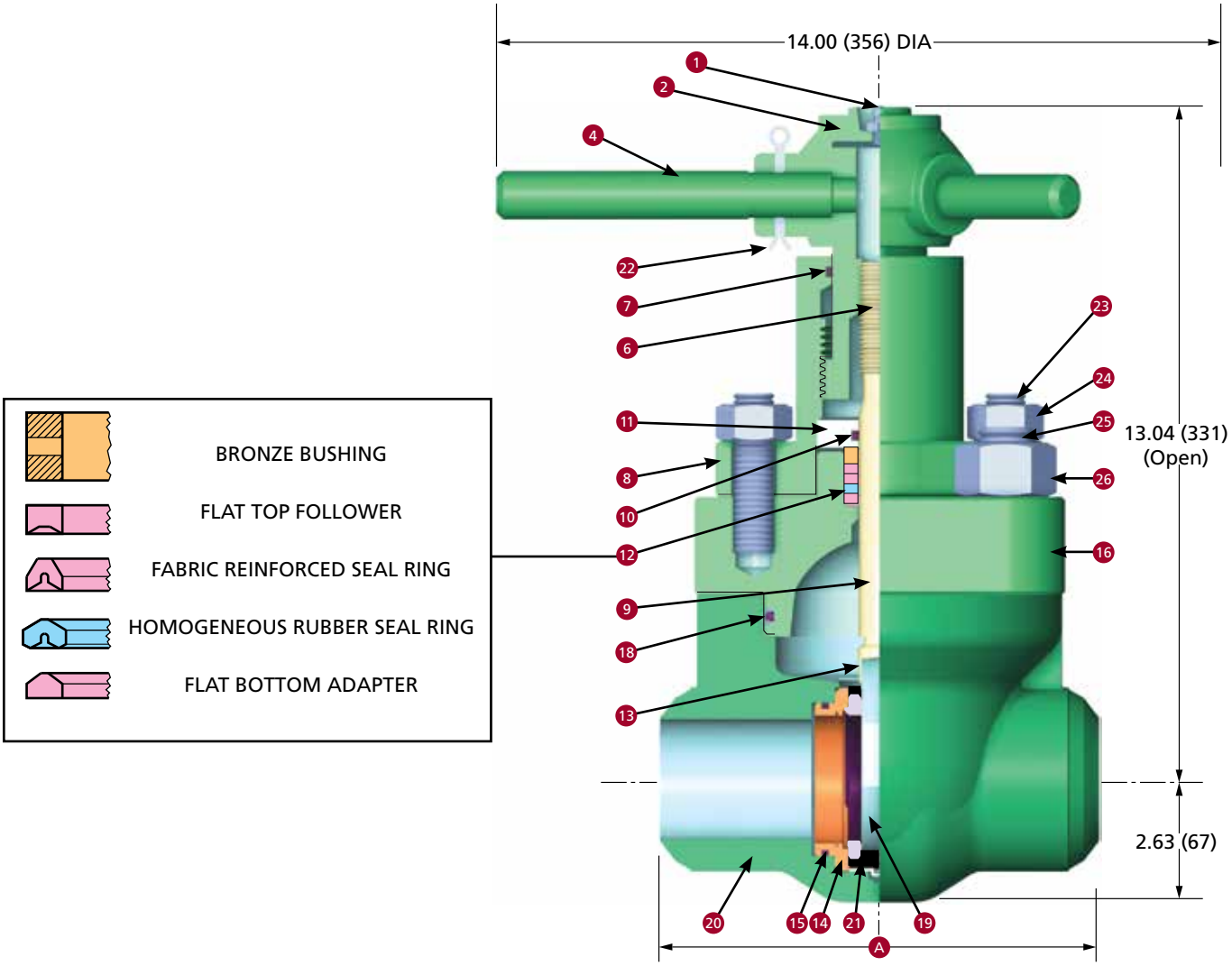

Dimensional Data and Weights

Dimension		Valve Size: 2″ (50 mm) FP 7500 WP
A	Weld End	9.00 (229)
	Flanged End, API Length	20.50 (521)
Valve Seat ID		2.00 (50)
For Flanged Ends		
	API Ring Number	BX-152
	Flange ID	2.06 (52)
	Flange OD	7.88 (200)
	Flange Bolts (Qty., Size: in.)	8 – 3/4
Number of Handle Turns from Open to Closed		8.60
Weight lb (kg)		
	Weld End	76 (34)
	Flanged End	124 (56)

ASSEMBLY PART NUMBER

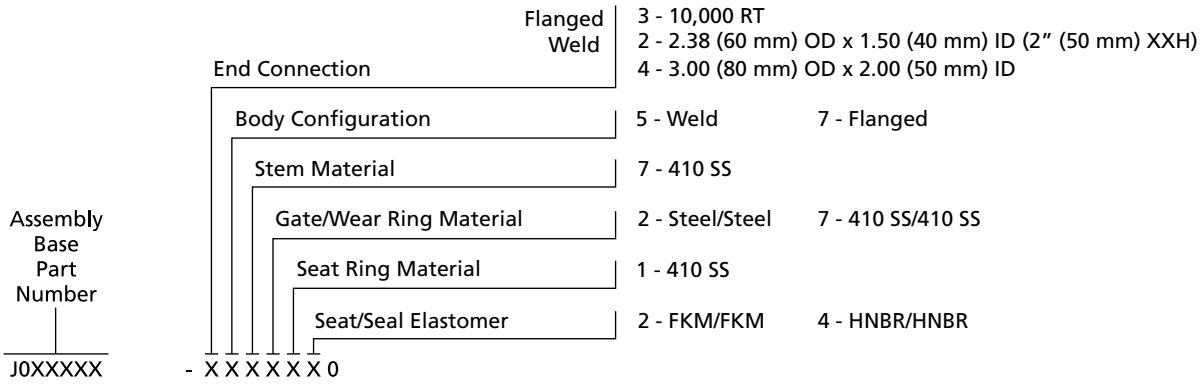

Group 1 Basic valve. Hydrostatic shell test: 11,250 psi for three minutes. Hydrostatic seat test: 7500 psi for three minutes, each side. Material traceability on body and bonnet.

Group 2 Same as Group 1, except: Hydrostatic shell test: 11,250 psi for three minutes, drop to 0 psi, then 11,250 psi for 15 minutes. Test is charted. Hydrostatic seat test: 7500 psi for three minutes, drop to 0 psi, 7500 for 15 minutes, drop to 0 psi, then 300 psi for five minutes, each side. Test is charted. Material traceability on body, bonnet, stem, and bolting. Impact tests at or below -50° F (-46° C) on body, bonnet, stem and bolting. Surface NDE on body, bonnet and stem.

Group 3 Same as Group 2, plus volumetric NDE on body and bonnet.

Parts List

	Key No.	Qty.	Description		Valve Size: 2" (50 mm) FP Group 1	Group 2	Group 3
			Assembly Base Number	Weld End: General Service	J024993	J025077	J025078
				Weld End: NACE Compliant	J025088	J025103	J025104
				Flanged End, API Length: General Service	J025130	J025208	J025131
				Flanged End, API Length: NACE Compliant	J025142	TBA	J025143
	1	1	Lube Fitting	Steel		005929-18	
	2	1	Handle	Ductile Iron ASTM A536 Grade 65-45-12		2139712-01	
	4	1	Lock Handle	AISI C-1213		J001891	
■	6	1	Stem Screw	AISI C-1213		J001913	
■	7	1	Housing Seal	Buna-N		J005526-224	
	8	1	Screw Housing	ASTM A350 Grade LF2 Class 1		J024982	
■	9	1	Stem	410 SS		J024983-107	
■	10	1	Secondary Seal	HNBR		2712425-13	
				FKM		J005531-210	
	11	1	Packing Retainer	AISI C-1213	J001940	-	
				17-4 PH SS	-	J021432	
■	12	1	Stem Seal Assembly	HNBR		J023231-008	
			(With Bronze Bushing – ASTM B505 Alloy 93200)	FKM		J023231-006	
■•	13	1	Gate Clip	AISI 302 SS		M450480	
■•	14	2	Body Wear Ring	For Steel Gate, AISI 4140 w/QPQ Nitride Coating		M452267	
				For SS Gate, AISI 410 Stainless Steel		2139647-02	
■•	15	2	Wear Ring Seal	HNBR		2712425-03	
				FKM		J005521-229	
	16	1	Bonnet	ASTM A487 Grade 4 Class D	J024985-030	2140428-01	2140341-01
■•	18	1	Bonnet Seal	HNBR		2712425-60	
				FKM		J005521-342	
■•	19	1	Gate	Steel AISI 4140 w/QPQ Nitride Coating		2171111-01	
				410 SS		2139624-02	
	20	1	Body Materials	ASTM A487 Grade 4 Class D		Consult Cameron for Body Part Numbers	
■•	21	1	Seat	410 SS/HNBR		2139742-01	
				Materials		Rings: AISI 410 SS; Elastomer: HNBR	
				410 SS/FKM		2139741-02	
				Materials		Rings: AISI 410 SS; Elastomer: FKM	
	22	1	Cotter Pin	Steel		J005420-18728	
	23	2	Housing Stud		J002066		J021436
				Materials	ASTM A193 Grade B7		ASTM A193 Grade L7
	24	2	Housing Stud Nut		2709000-08-01		J053252-034
				Materials	ASTM A194 Grade 2H		ASTM A194 Grade 7
	25	4	Body Stud		J015432		J021442
				Materials	ASTM A193 Grade B7		ASTM A193 Grade L7
	26	4	Body Stud Nut		2709000-10-01		J053252-038
				Materials	ASTM A194 Grade 2H		ASTM A194 Grade 7

■ Major repair kit J025177-10274 – One each for one year of service.

• Minor repair kit J025177-00274.

Major and minor repair kits listed for trim option J0XXXXX-XX72140 (410 SS Stem, Steel/QPQ Gate, HNBR Seat/Seals)
Consult Cameron for optional repair kit trim options

SERIES DM 7500 GATE VALVES – 7500 PSI WP

3″ (80 mm) Full Port

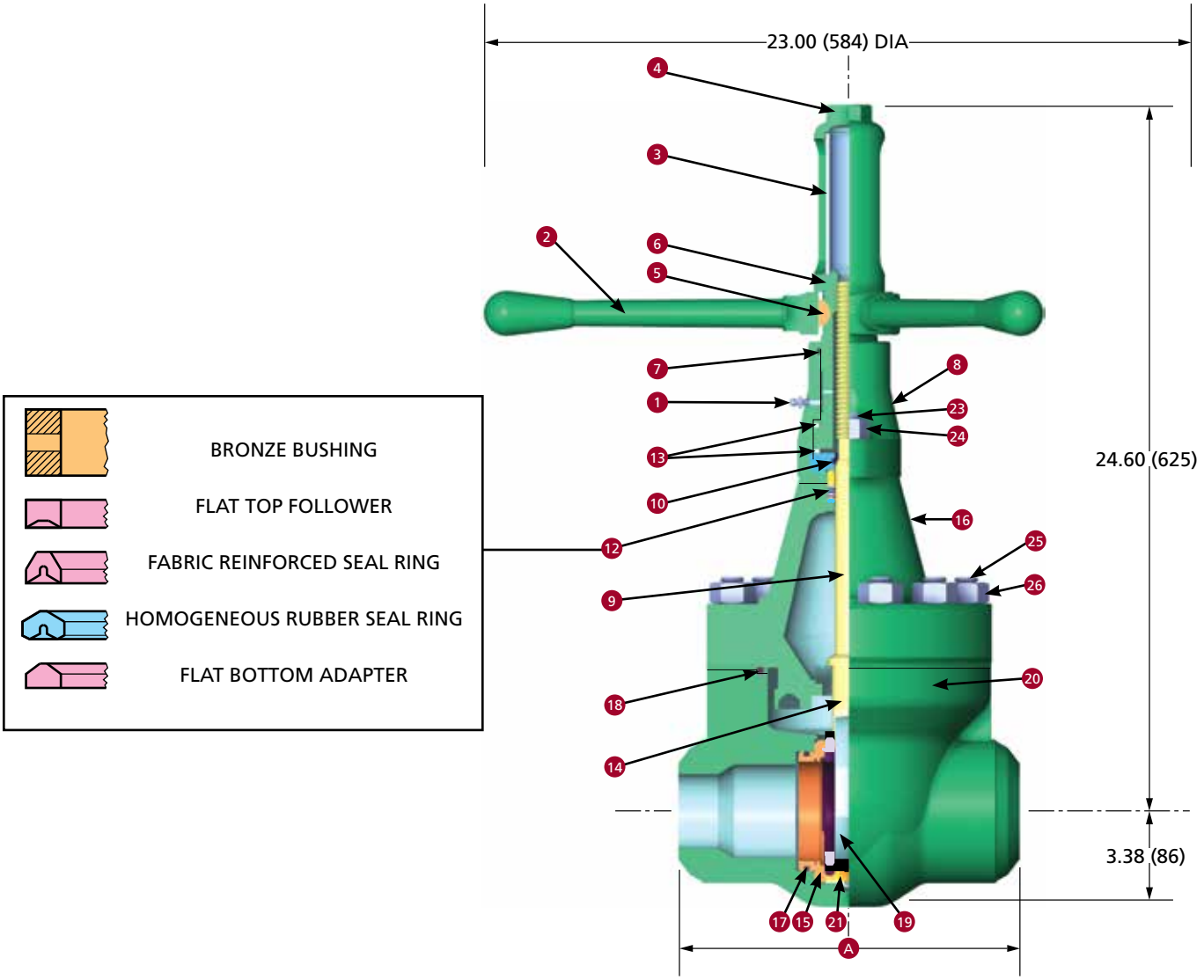

Dimensional Data and Weights

Dimension		Valve Size: 3″ (80 mm) FP 7500 WP
A	Weld End	13.00 (330)
	Flanged End, API Length	24.38 (619)
Valve Seat ID		3.00 (80)
For Flanged Ends		
	API Ring Number	BX-154
	Flange ID	3.06 (78)
	Flange OD	10.62 (270)
	Flange Bolts (Qty., Size: in.)	8 – 1
Number of Handle Turns from Open to Closed		16.01
Weight lb (kg)		
	Weld End	256 (116)
	Flanged End	372 (169)

ASSEMBLY PART NUMBER

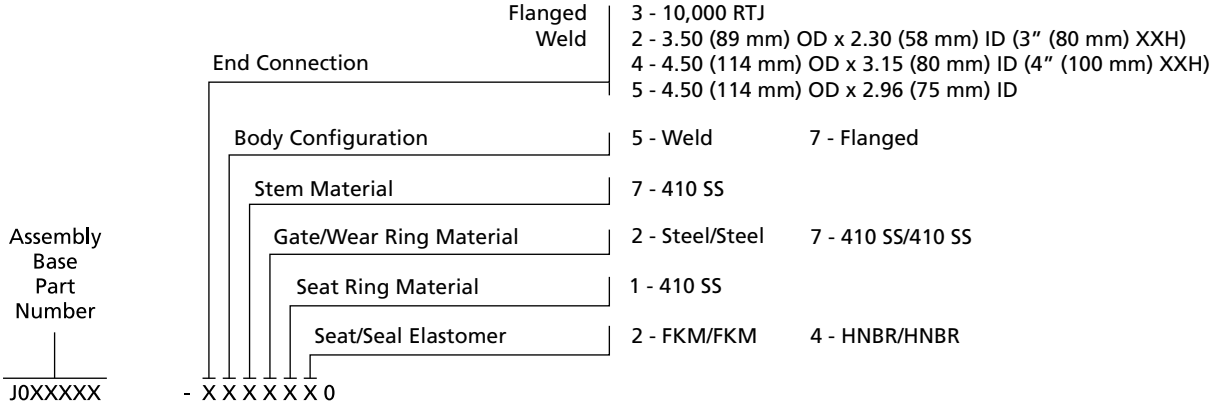

Group 1 Basic valve. Hydrostatic shell test: 11,250 psi for three minutes. Hydrostatic seat test: 7500 psi for three minutes, each side. Material traceability on body and bonnet.

Group 2 Same as Group 1, except: Hydrostatic shell test: 11,250 psi for three minutes, drop to 0 psi, then 11,250 psi for 15 minutes. Test is charted. Hydrostatic seat test: 7500 psi for three minutes, drop to 0 psi, 7500 for 15 minutes, drop to 0 psi, then 300 psi for five minutes, each side. Test is charted. Material traceability on body, bonnet, stem and bolting. Impact tests at or below -50° F (-46° C) on body, bonnet, stem, and bolting. Surface NDE on body, bonnet and stem.

Group 3 Same as Group 2, plus volumetric NDE on body and bonnet.

Parts List

	Key No.	Qty.	Description		Valve Size: 3" (80 mm) FP Group 1	Group 2	Group 3
			Base Assembly Number	General Service	J025051	J025079	J025080
				NACE Compliant	J025089	J025105	J025106
	1	1	Lube Fitting	Steel		005929-18	
	2	1	Handle	Ductile Iron ASTM A536 Grade 65-45-12		2139481-01	
	3	1	Stem Tube	Clear Acrylic		J007459	
	4	1	Stem Cap	Ductile Iron ASTM A536 Grade 65-45-12		J007411	
	5	1	Key	Steel		J005305-10016	
■	6	1	Stem Screw	AISI C-1213		J007416	
■	7	1	Housing Seal	Buna-N		J005526-226	
	8	1	Housing	ASTM A350 Grade LF2 Class 1	J007418	J021448-040	
				Materials	AISI C-1029 Normalized	ASTM A352 Grade LCC	
■	9	1	Stem	410 SS		J024951-107	
■	10	1	Secondary Seal	HNBR		2712425-01	
				FKM		J005531-214	
	11	1	Packing Retainer		J007413	J021434	
				Materials	AISI C-1213	17-4 PH SS	
■	12	1	Stem Seal Assembly	HNBR		J001951-008	
			(With Bronze Bushing – SAE 660)	FKM		J001951-006	
■	13	2	Bearing	Teflon®/Phenolic		J007426	
■•	14	1	Gate Clip	AISI 302 SS		M450505	
■•	15	2	Body Wear Ring	For Steel Gate		M452571	
				Material		AISI 4140 w/QPQ Nitride Coating	
				For SS Gate		2139648-02	
				Material		AISI 410 Stainless Steel	
	16	1	Bonnet	ASTM A487 Grade 4 Class D	J017289-029	2140370-01	2140370-02
■•	17	2	Wear Ring Seal	HNBR		2712783-03	
				FKM		J005521-340	
■•	18	1	Bonnet Seal	HNBR		2712787-07	
				FKM		J005521-361	
■•	19	1	Gate	AISI 4140 w/QPQ Nitride Coating		2171112-01	
				410 SS		2139628-02	
	20	1	Body Materials	ASTM A487 Grade 4 Class D		Consult Cameron for Body Part Numbers	
■•	21	1	Seat	410 SS/HNBR		2139744-01	
				Materials		Rings: AISI 410 SS; Elastomer: HNBR	
				410 SS/FKM		2139743-02	
				Materials		Rings: AISI 410 SS; Elastomer: FKM	
	23	2	Housing Stud		J002072		J021441
				Materials	ASTM A193 Grade B7		ASTM A193 Grade L7
	24	2	Housing Stud Nut		2709000-09-01		J053252-036
				Materials	ASTM A194 Grade 2H		ASTM A194 Grade 7
	25	12	Body Stud		J015432		J021442
				Materials	ASTM A193 Grade B7		ASTM A193 Grade L7
	26	12	Body Stud Nut		2709000-10-01		J053252-038
				Materials	ASTM A194 Grade 2H		ASTM A194 Grade 7

■ Major repair kit J025177-10374 – One each for one year of service.

• Minor repair kit J025177-00374.

Major and minor repair kits listed for trim option J0XXXXX-XX72140 (410 SS Stem, Steel/QPQ Gate, HNBR Seat/Seals)
Consult Cameron for optional repair kit trim options

SERIES DM 7500 GATE VALVES – 7500 PSI WP

4" (100 mm) Full Port

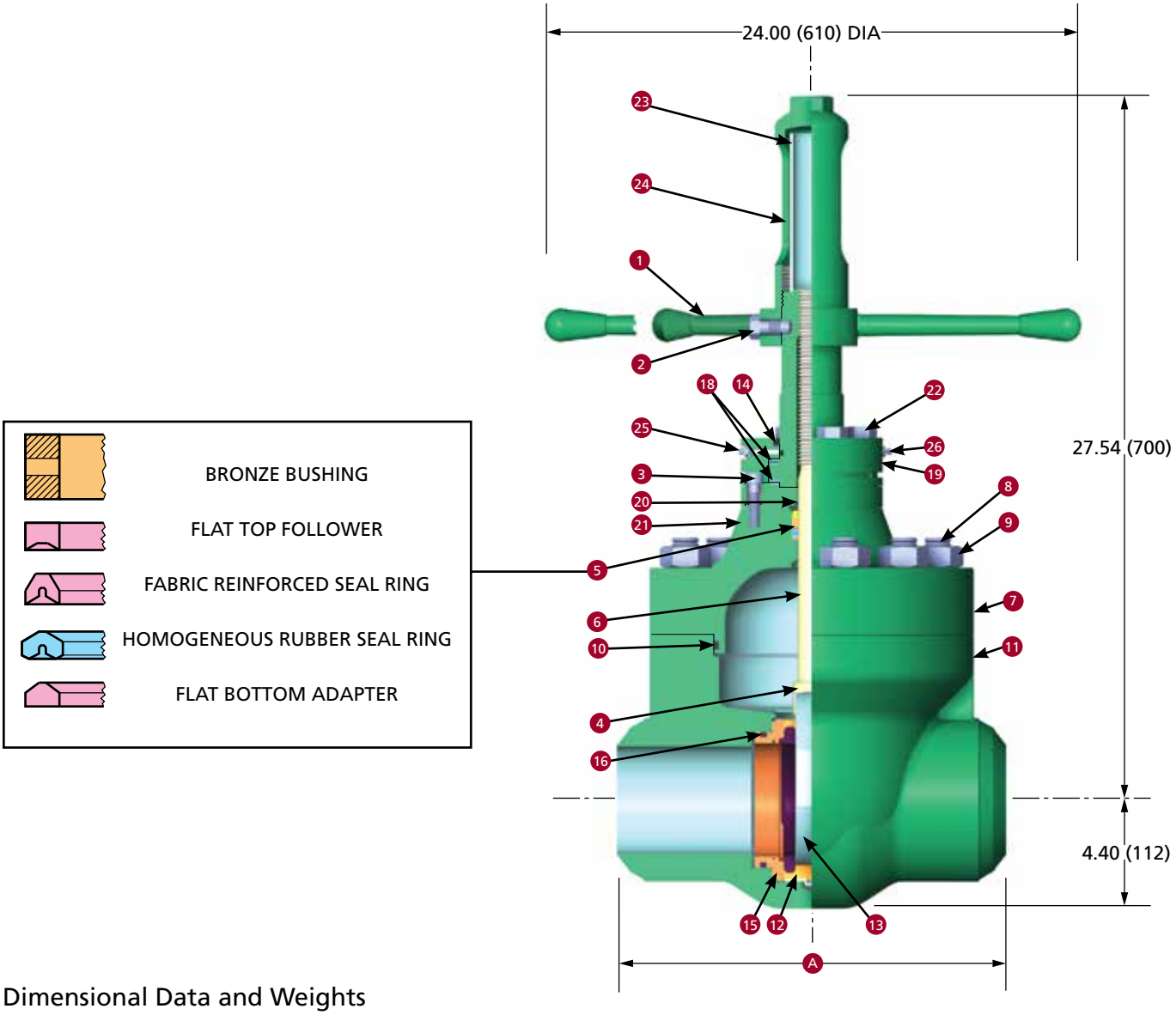

Dimensional Data and Weights

Dimension		Valve Size: 4" (100 mm) FP 7500 WP
A	Weld End	16.00 (406)
	Flanged End	26.38 (670)
Valve Seat ID		4.00 (100)
For Flanged Ends		
	API Ring Number	BX-155
	Flange ID	4.06 (103)
	Flange OD	12.44 (316)
	Flange Bolts (Qty., Size: in.)	8 – 1-1/8
Number of Handle Turns from Open to Closed		21.36
Weight lb (kg)		
	Weld End	310 (141)
	Flanged End	475 (215)

ASSEMBLY PART NUMBER

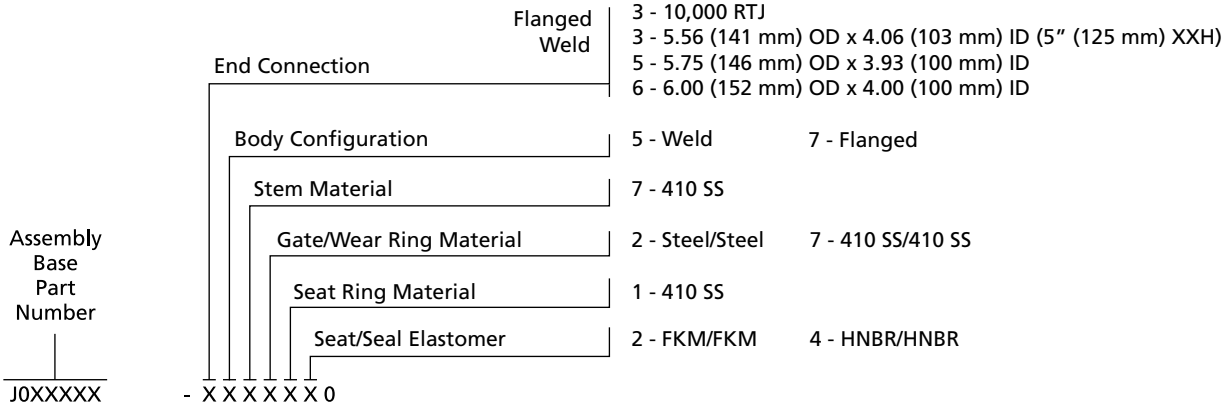

Group 1 Basic valve. Hydrostatic shell test: 11,250 psi for three minutes. Hydrostatic seat test: 7500 psi for three minutes, each side. Material traceability on body and bonnet.

Group 2 Same as Group 1, except: Hydrostatic shell test: 11,250 psi for three minutes, drop to 0 psi, then 11,250 psi for 15 minutes. Test is charted. Hydrostatic seat test: 7500 psi for three minutes, drop to 0 psi, 7500 for 15 minutes, drop to 0 psi, then 300 psi for five minutes, each side. Test is charted. Material traceability on body, bonnet, stem and bolting. Impact tests at or below -50° F (-46° C) on body, bonnet, stem and bolting. Surface NDE on body, bonnet and stem.

Group 3 Same as Group 2, plus volumetric NDE on body and bonnet.

Parts List

	Key No.	Qty.	Description		Valve Size: 4" (100 mm) FP Group 1	Group 2	Group 3
			Base Assembly Number	General Service	J025100	J025101	J025081
				NACE Compliant	J025102	J025107	J025108
	1	1	Handwheel	Ductile Iron ASTM A536 Grade 65-45-12	2227565-01		
	2	1	Handwheel Screw	AISI C-1018	J014832		
	3	4	Retainer Screw		J005665-32028	J005666-32028	
				Materials	Alloy Steel	18-8 SS	
■•	4	1	Gate Clip	AISI 302 SS	M450505		
■	5	1	Stem Seal Assembly	HNBR	J015853-008		
			(With Bronze Bushing – ASTM B271 Alloy C95500)	FKM	J015853-006		
■	6	1	Stem	410 SS	2140684-01		
	7	1	Bonnet	ASTM A487 Grade 4 Class D	2172523-01	2172523-02	2172523-03
	8	10	Body Stud		2171976-11-01	2171978-11-01	
				Materials	ASTM A193 Grade B7	ASTM A193 Grade L7	
	9	10	Body Stud Nut		2709000-11-01	J053252-140	
				Materials	ASTM A194 Grade 2H	ASTM A194 Grade 7	
■•	10	1	Bonnet Seal	HNBR	2712426-11		
				FKM	J005521-364		
	11	1	Body Materials	ASTM A487 Grade 4 Class D	Consult Cameron for Body Part Numbers		
■•	12	1	Seat	410 SS/HNBR	2139746-01		
				Materials	Rings: AISI 410 Stainless Steel; Elastomers: HNBR		
				410 SS/FKM	2139745-02		
				Materials	Rings: AISI 410 Stainless Steel; Elastomers: FKM		
■•	13	1	Gate – Steel/QPQ	AISI 4140 w/QPQ Nitride Coating	2171267-01		
				410 SS	2139637-02		
■	14	1	Housing Seal	Buna-N	J005526-228		
■•	15	2	Body Wear Ring	For Steel Gate	M452290		
				Materials	AISI 4140 w/QPQ Nitride Coating		
				For Stainless Steel Gate	2139649-02		
				Materials	AISI 410 Stainless Steel		
■•	16	2	Wear Ring Seal	HNBR	2712787-04		
				FKM	J005521-349		
■	18	1	Stem Screw with Bearings		J0023888		
				Materials	Stem Screw: AISI C-1018 Bearings: Hardened Steel Needle Thrust Bearings		
	19	1	Housing	AISI C-1018	J015332		
■	20	1	Secondary Seal	HNBR	2726268-01		
				FKM	J005531-216		
	21	1	Packing Retainer		J015330	2172425-02	
				Materials	AISI C-1018	AISI 4130	
	22	4	Housing Screw	Steel SAE Grade 5	702500-14-00-34		
	23	1	Stem Tube	Clear Acrylic	J012852		
	24	1	Stem Cap	Ductile Iron	J015855		
	25	1	Lube Fitting	Steel	005929-18		
	26	1	Relief Fitting	Steel	J051971		

■ Major repair kit J025177-10474 – One each for one year of service.

• Minor repair kit J025177-00474.

Major and minor repair kits listed for trim option J0XXXXX-XX72140 (410 SS Stem, Steel/QPQ Gate, HNBR Seat/Seals)
Consult Cameron for optional repair kit trim options

SERIES DM 7500 GATE VALVES – 7500 PSI WP

5″ (125 mm) Full Port

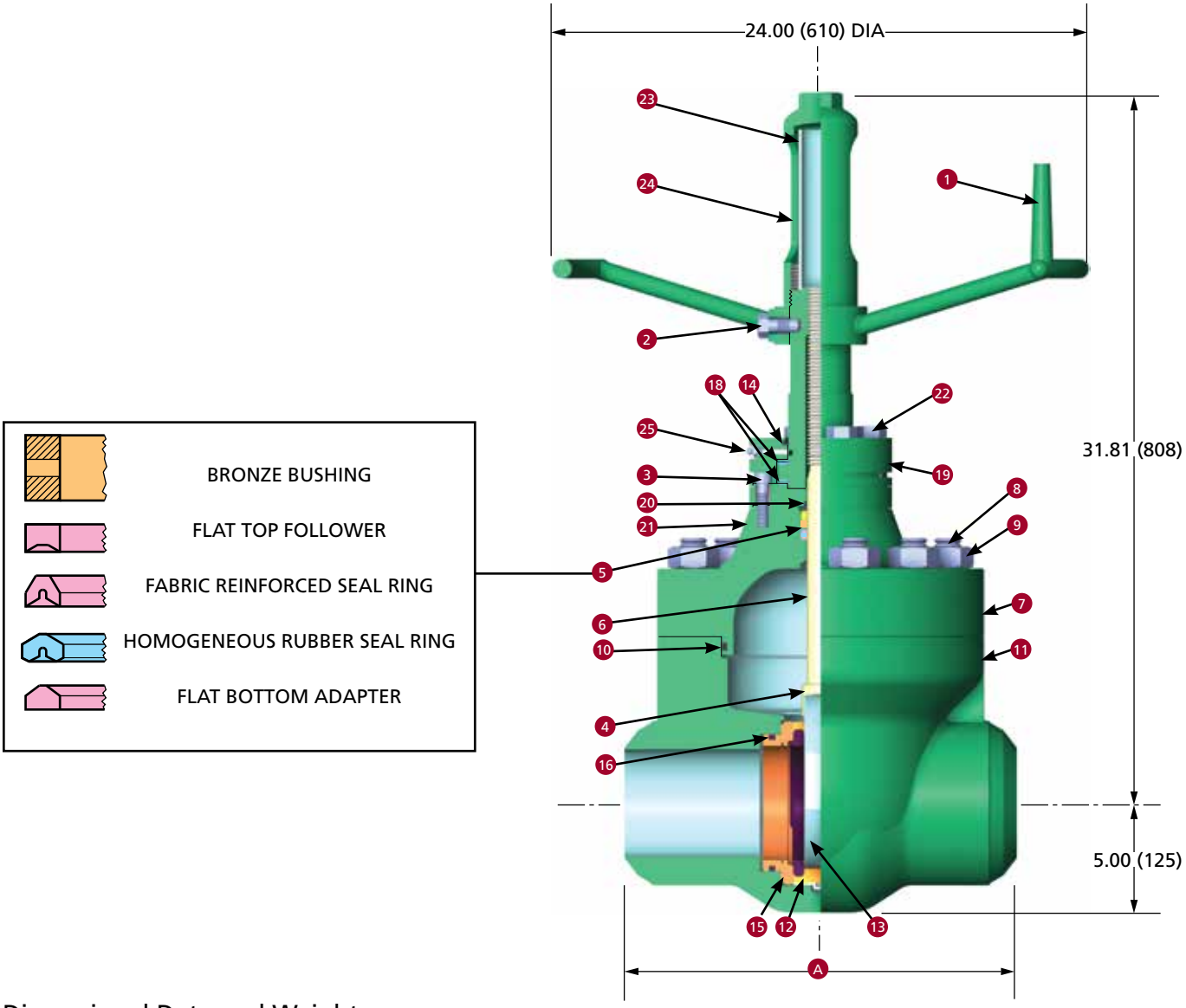

Dimensional Data and Weights

Dimension		Valve Size: 5″ (125 mm) FP 7500 WP
A	Weld End	17.88 (454)
	Flanged End	29.00 (737)
Valve Seat ID		5.00 (125)
For Flanged Ends		
	API Ring Number	BX-169
	Flange ID	5.12 (130)
	Flange OD	14.06 (357)
	Flange Bolts (Qty., Size: in.)	12 – 1-1/8
Number of Handle Turns from Open to Closed		27.67
Weight lb (kg)		
	Weld End	506 (230)
	Flanged End	761 (345)

ASSEMBLY PART NUMBER

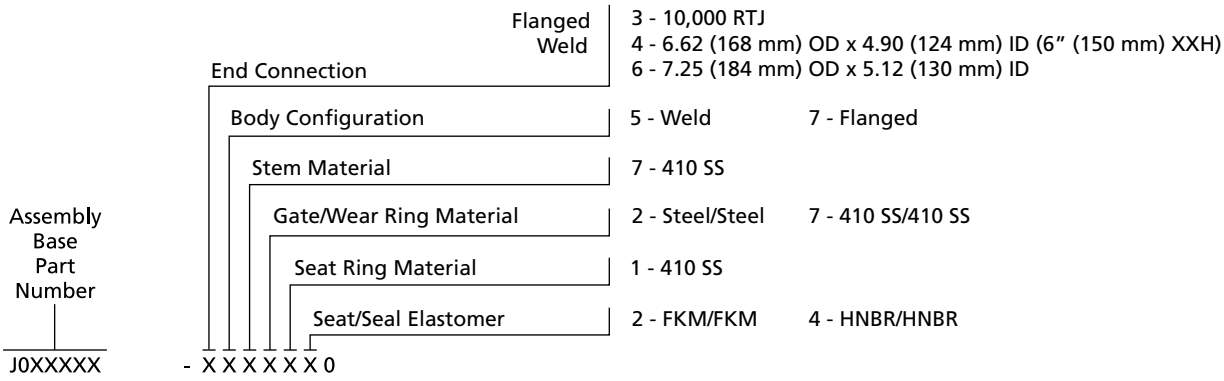

Group 1 Basic valve. Hydrostatic shell test: 11,250 psi for three minutes. Hydrostatic seat test: 7500 psi for three minutes, each side. Material traceability on body and bonnet.

Group 2 Same as Group 1, except: Hydrostatic shell test: 11,250 psi for three minutes, drop to 0 psi, then 11,250 psi for 15 minutes. Test is charted. Hydrostatic seat test: 7500 psi for three minutes, drop to 0 psi, 7500 for 15 minutes, drop to 0 psi, then 300 psi for five minutes, each side. Test is charted. Material traceability on body, bonnet, stem and bolting. Impact tests at or below -50° F (-46° C) on body, bonnet, stem and bolting. Surface NDE on body, bonnet and stem.

Group 3 Same as Group 2, plus volumetric NDE on body and bonnet.

Parts List

	Key No.	Qty.	Description		Valve Size: 5" (125 mm) FP Group 1	Group 2	Group 3
			Assembly Base Number	General Service	J024994	J025083	J025084
				NACE Compliant	J025090	J025109	J025110
	1	1	Handwheel	Ductile Iron ASTM A536 Grade 65-45-12		J016986	
	2	1	Handwheel Screw	AISI C-1018		J016987	
	3	4	Retainer Screw		J005665-32028	J005666-32028	
				Materials	Alloy Steel	18-8 SS	
■•	4	1	Gate Clip	AISI 302 SS		M451649	
■	5	1	Stem Seal Assembly	HNBR		J016995-008	
			(With Bronze Bushing – ASTM B271 Alloy C95500)	FKM		J016995-006	
■	6	1	Stem	410 SS		J024943-107	
	7	1	Bonnet	ASTM A487 Grade 4 Class D	J024956-030	J024956-051	J024956-052
	8	12	Body Stud		2171976-12-01	2171978-12-02	
				Materials	ASTM A193 Grade B7	ASTM A193 Grade L7	
	9	12	Body Stud Nut		2709000-12-01	J053252-142	
				Materials	ASTM A194 Grade 2H	ASTM A194 Grade 7	
■•	10	1	Bonnet Seal	HNBR		2712425-78	
				FKM		J005521-446	
	11	1	Body Materials	ASTM A487 Grade 4 Class D		Consult Cameron for Body Part Numbers	
■•	12	1	Seat	410 SS/HNBR		2139748-01	
				Materials		Rings: AISI 410 Stainless Steel; Elastomers: HNBR	
				410 SS/FKM		2269500-01	
				Materials		Rings: AISI 410 Stainless Steel; Elastomers: FKM	
■•	13	1	Gate – Steel/QPQ	AISI 4140 w/QPQ Nitride Coating		2171108-01	
				410 SS		2139629-02	
■	14	1	Housing Seal	Urethane		2726191-02-95	
■•	15	2	Body Wear Ring	For Steel Gate		M452619	
				Materials		AISI 4140 w/QPQ Nitride Coating	
				For Stainless Steel Gate		2139650-02	
				Materials		AISI 410 Stainless Steel	
■•	16	2	Wear Ring Seal	HNBR		2726268-02	
				FKM		J005521-435	
■	18	1	Stem Screw with Bearings			J023848	
				Materials		Stem Screw: AISI C-1018 Bearings: Hardened Steel Needle Thrust Bearings	
	19	1	Housing	AISI C-1018		J018190	
■	20	1	Secondary Seal	HNBR		2712425-12	
				FKM		J005531-218	
	21	1	Packing Retainer		J018191	2171930-01	
				Materials	AISI C-1018	AISI 4130	
	22	4	Housing Screw	Steel SAE Grade 5		702500-16-00-40	
	23	1	Stem Tube	Clear Acrylic		J018192	
	24	1	Stem Cap	Ductile Iron		J018193	
	25	1	Lube Fitting	Steel		005929-18	

■ Major repair kit J025177-10574 – One each for one year of service.

• Minor repair kit J025177-00574.

Major and minor repair kits listed for trim option J0XXXXX-XX72140 (410 SS Stem, Steel/QPQ Gate, HNBR Seat/Seals)
Consult Cameron for optional repair kit trim options

SERIES DM GATE VALVES – 2000, 3000, AND 5000 PSI WP

2" (50 mm) Full Port and 2-1/2" (65 mm) Reduced Port

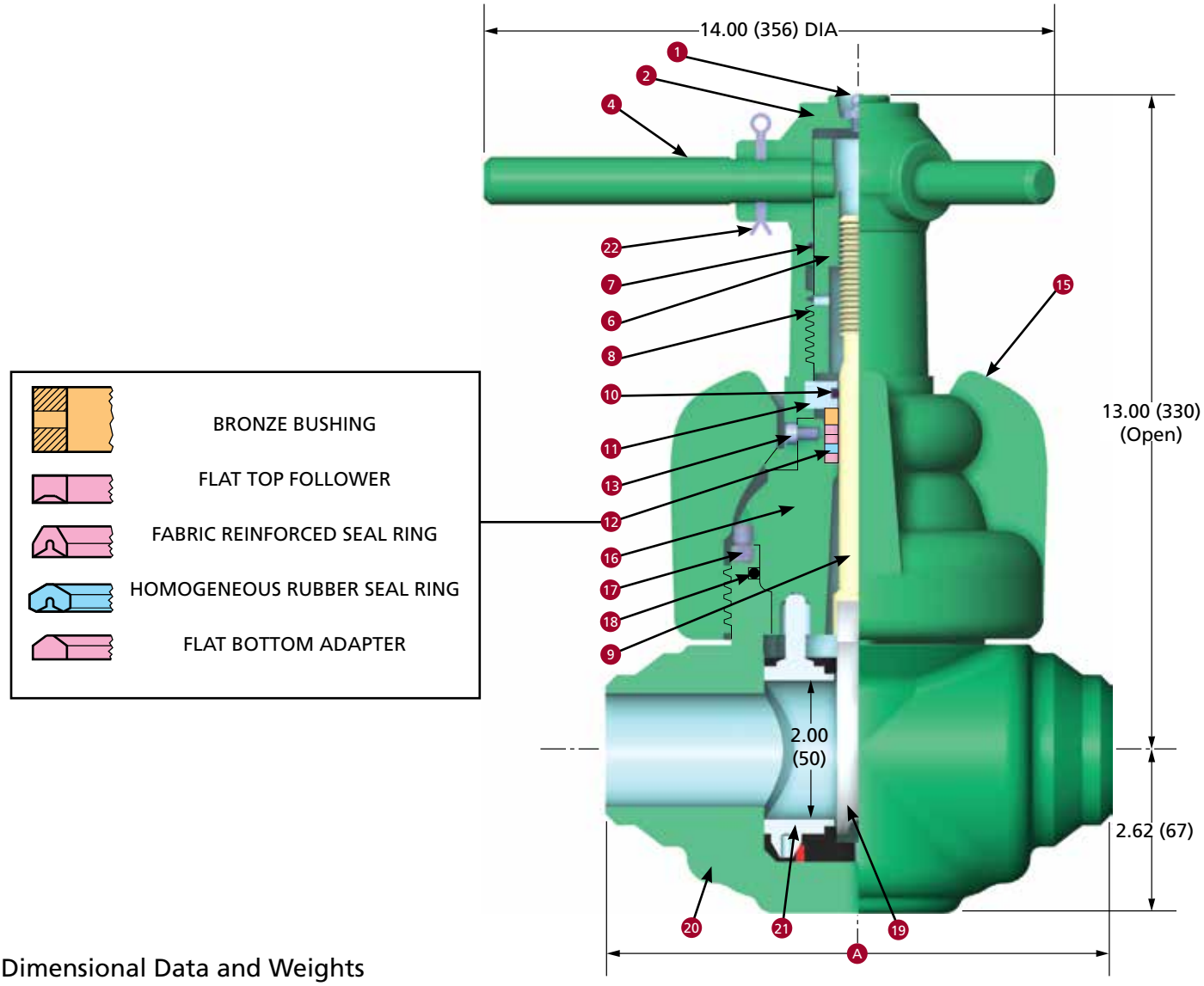

Dimensional Data and Weights

Dimension		Valve Size: 2" (50 mm) FP and 2-1/2" x 2" (65 mm x 50 mm) RP*					
		2000 WP		3000 WP		5000 WP	
A	Threaded, Weld and Grooved	9.00 (229)	9.00 (229)	9.00 (229)	9.00 (229)	9.00 (229)	9.00 (229)
	Flanged – RTJ	11.62 (295)	-	11.62 (295)	-	12.12 (308)	-
	Flange OD	6.50 (165)	-	8.50 (216)	-	8.50 (216)	-
	Flange Bolts (Qty., Size: in.)	8 – 5/8	-	8 – 7/8	-	8 – 7/8	-
	Ring Number (RTJ)	R-23	-	R-24	-	R-24	-
Weight lb (kg)							
	Threaded, Weld and Grooved	56 (25)	56 (25)	58 (26)	58 (26)	58 (26)	58 (26)
	Flanged	70 (32)	-	100 (45)	-	110 (50)	-

* 2-1/2" x 2" (65 mm x 50 mm) RP only available in weld end.

ASSEMBLY PART NUMBER

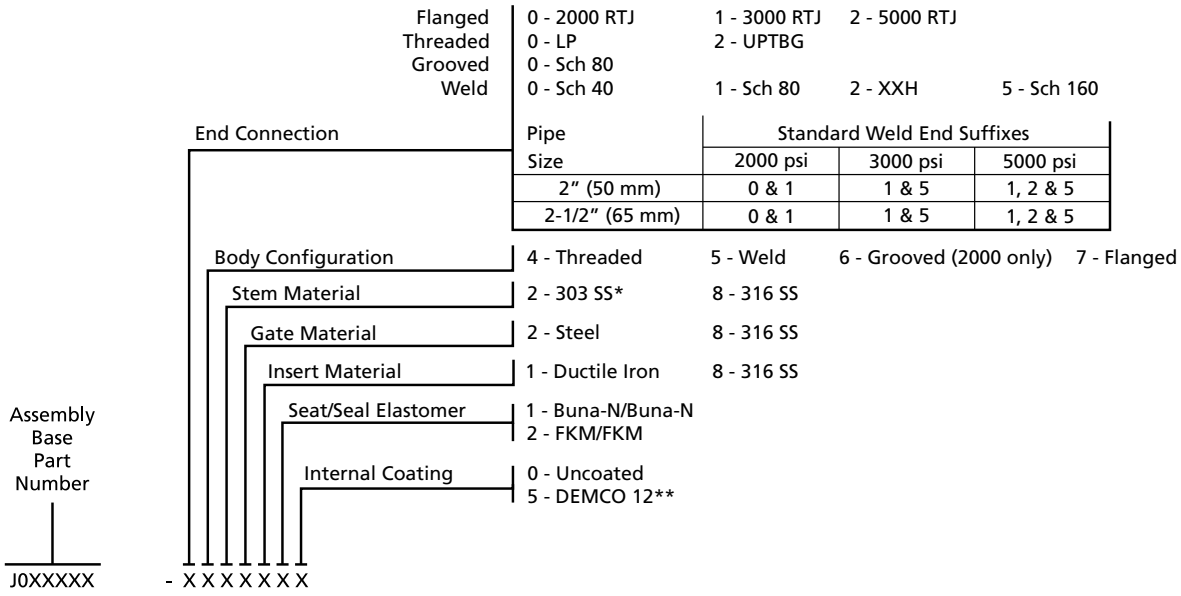

Consult Cameron For Additional Trim Options.
* Available on General Service valves
**Internal coating only, weld end bodies are not available with internal or external coatings

Parts List

Key No.	Qty.	Description		Valve Size: 2" (50 mm) FP and 2-1/2" (65 mm) RP 2000 WP General/(NACE)	3000 WP General/(NACE)	5000 WP General/(NACE)
		Assembly Base Part Number	2" (50 mm) Full Port – Threaded	J001026/(TBA)	J001027/(J025092)	J001028/(J024929)
			– Weld	J001029/(TBA)	J001030/(J025092)	J001031/(J024929)
			– Grooved	J011920/(TBA)	-	-
			– Flanged	J001023/(TBA)	J001024/(J025092)	J001025/(J024929)
			2-1/2" (65 mm) Reduced Port – Weld	J001115/(TBA)	J001114/(TBA)	J001109/(J025205)
1	1	Lube Fitting	Steel	005929-18	005929-18	005929-18
2	1	Handle	ASTM A536 Ductile Iron	2139712-01	2139712-01	2139712-01
4	1	Lock Handle	C-1213	J001891	J001891	J001891
■ 6	1	Stem Screw	C-1213	J001913	J001913	J001913
■ 7	1	Stem Screw Seal	Buna-N	J005526-224	J005526-224	J005526-224
8	1	Screw Housing	C-1018	J001848	J001848	J001848
■ 9	1	Stem	303 SS -002, 316 SS -008	J001931-XXX	J001931-XXX	J001931-XXX
■ 10	1	Secondary Seal	Buna-N	J005526-210	J005526-210	J005526-210
11	1	Retainer	C-1213	J001940	J001940	J001940
■ 12	1	Stem Seal Assembly	Buna-N -001, FKM -006	J001949-XXX	J001949-XXX	J001949-XXX
13	1	Lock Screw	Steel	J005665-22004	J005665-22004	J005665-22004
15	1	Coupling	A216 Steel -020, A487 Steel -030	J001445-030	J001445-030	J001445-030
16	1	Bonnet	ASTM A105	J001237-XXX	J001237-XXX	J001237-XXX
			Coatings		Uncoated-020, DEMCO 12-025	
17	1	Index Pin	Steel	J001981	J001981	J001981
■• 18	1	Bonnet Seal	Buna-N	J005526-342	J005526-342	J005526-342
			FKM	J005531-342	J005531-342	J005531-342
■• 19	1	Gate		J001887-XXX	J001887-XXX	J001887-XXX
			Materials	AISI 1045 Nickel Plated -002, Cast SS ASTM A351 Grade CF8M – 108		
20	1	Body Materials	Threaded, Weld and Grooved – ASTM A105 Normalized 2000 Flanged – Fabricated from Weld Body and Commercial Flanges 3000 Flanged – ASTM A216 Grade WCB 5000 Flanged – ASTM A487 Grade 4A or 2B Coatings (Except Weld End Bodies): DEMCO 12	Consult Cameron for Body Part Numbers		
■• 21	1	Seat Assembly		J001876-0XX	J001876-0XX	J001876-0XX
			Materials	Inserts: -01X Ductile Iron ASTM A395 or Steel AISI C1040 -08X 316 SS ASTM A351 Grade CF8M Annealed Elastomers: -0X1 Buna-N, -0X2 FKM		
22	1	Pin, Lock Handle	Steel	J005420-18728	J005420-18728	J005420-18728

■ Major repair kit J025216-11221 – One each for one year of service.
• Minor repair kit J025216-01221.
Major and minor repair kits listed for trim option J0XXXXX-XX72140 (410 SS Stem, Steel/QPQ Gate, HNBR Seat/Seals)
Consult Cameron for optional repair kit trim options

SERIES DM GATE VALVES – 2000, 3000, AND 5000 PSI WP

2-1/2″ (65 mm) and 3″ (80 mm) Full Port

4″ (100 mm) Reduced Port

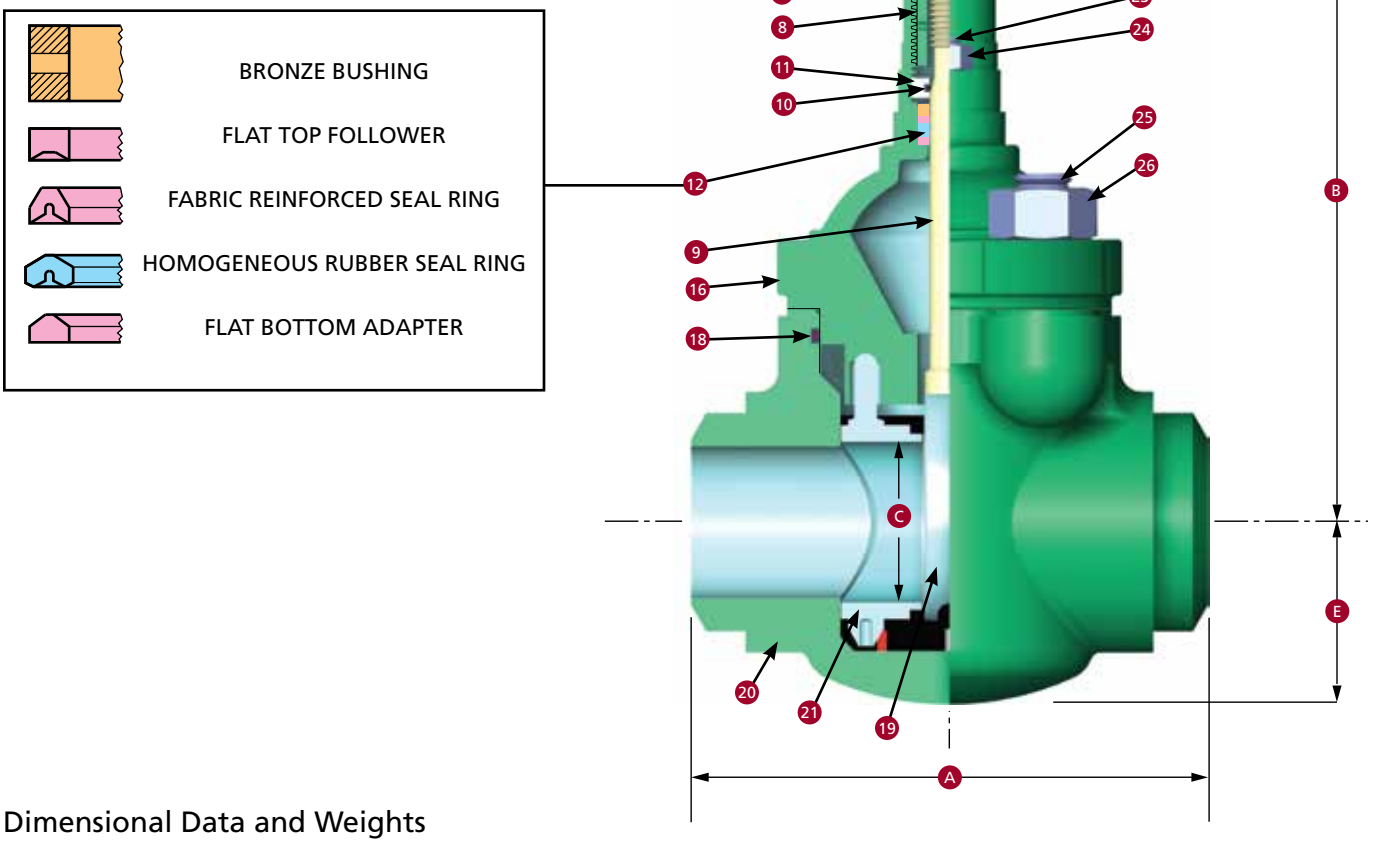

Dimensional Data and Weights

Dimension		Valve Size						
		FP 2-1/2″ (65 mm)	FP 3″ (80 mm)	FP 2-1/2″ (65 mm)	FP 3″ (80 mm)	RP 4″ x 3″ (100 x 80 mm)	FP 3″ (80 mm)	RP 4″ x 3″ (100 x 80 mm)
		2000 WP		3000 WP			5000 WP	
A	Threaded, Weld and Grooved	9.75 (248)	11.00 (279)	9.75 (248)	11.00 (279)	11.00 (279)	11.00 (279)	11.00 (279)
	Flanged – RTJ	16.62 (422)	14.12 (359)	16.62 (422)	14.12 (359)	-	15.62 (397)	-
B	(Open)	17.00 (432)	18.00 (457)	17.00 (432)	18.00 (457)	18.00 (457)	18.00 (457)	18.00 (457)
C	(Seat Bore)	2.50 (65)	3.00 (80)	2.50 (65)	3.00 (80)	3.00 (80)	3.00 (80)	3.00 (80)
D		19.00 (483)	19.00 (483)	19.00 (483)	19.00 (483)	19.00 (483)	19.00 (483)	19.00 (483)
E	Threaded, Weld and Grooved	3.12 (79)	3.50 (89)	3.25 (83)	3.69 (94)	3.69 (94)	3.94 (100)	3.94 (100)
	Flanged – RTJ	3.19 (81)	3.50 (89)	3.19 (81)	3.69 (94)	-	3.94 (100)	-
	Flange OD	7.50 (191)	8.25 (210)	9.62 (244)	9.50 (241)	-	10.50 (267)	-
	Flange Bolts (Qty., Size: in.)	8-3/4	8-3/4	8-1	8-7/8	-	8 – 1-1/8	-
	Ring Number (RTJ)	R-26	R-31	R-27	R-31	-	R-35	-
Weight lb (kg)								
	Threaded, Weld and Grooved	74 (34)	95 (43)	87 (39)	113 (51)	113 (51)	140 (64)	140 (64)
	Flanged	141 (64)	131 (59)	170 (77)	175 (79)	-	241 (109)	-

ASSEMBLY PART NUMBER

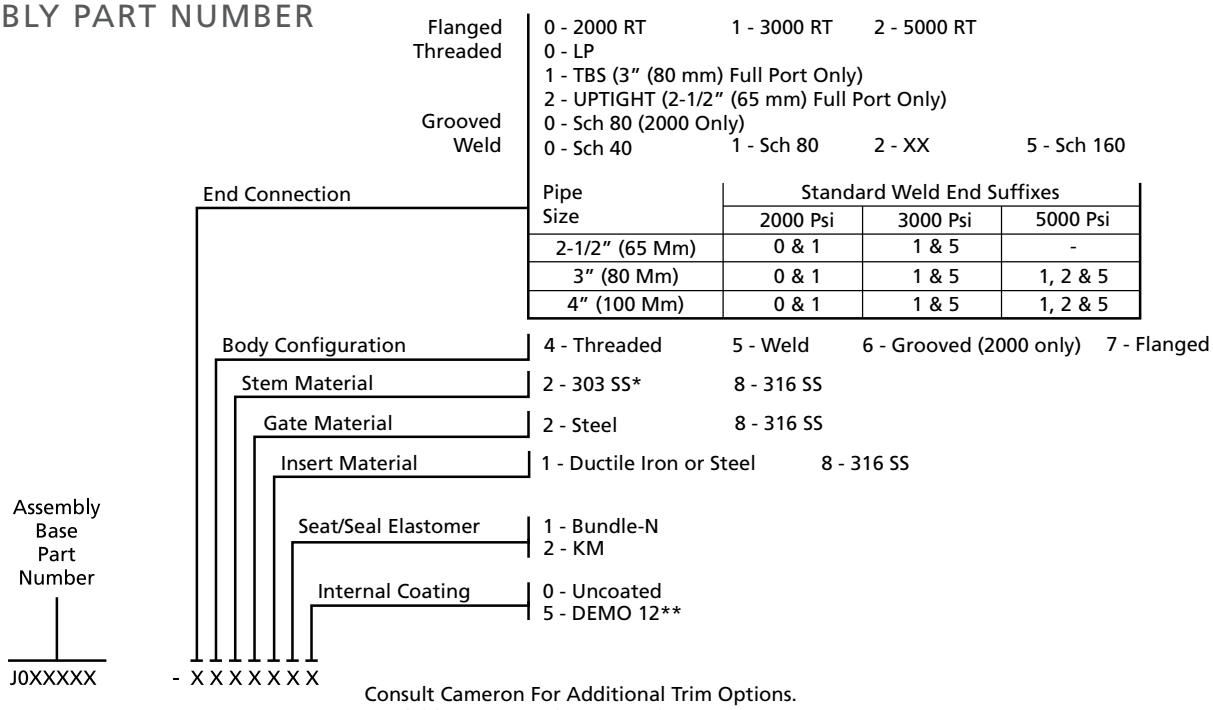

Pipe Size	Standard Weld End Suffixes		
	2000 Psi	3000 Psi	5000 Psi
2-1/2" (65 Mm)	0 & 1	1 & 5	-
3" (80 Mm)	0 & 1	1 & 5	1, 2 & 5
4" (100 Mm)	0 & 1	1 & 5	1, 2 & 5

Consult Cameron For Additional Trim Options.
* Available on General Service valves
**Internal coating only, weld end bodies are not available with internal or external coatings

Parts List

	Key No.	Qty.	Description		Valve Size: 2-1/2" (65 mm) FP			Valve Size: 3" (80 mm) FP and 4" (100 mm) RP		
					2000 WP General/(NACE)	3000 WP General/(NACE)	5000 WP General/(NACE)	2000 WP General/(NACE)	3000 WP General/(NACE)	5000 WP General/(NACE)
			Assembly Base Part Number	2-1/2" (65 mm) and 3" (80 mm)						
				Full Port – Threaded	J001042/(TBA)	-	J001043/(TBV)	J001045/(TBA)	J001046/(J025179)	J001047/(J025119)
				– Weld	J001051/(TBA)	-	J001052/(TBV)	J001054/(TBA)	J001055/(J025179)	J001056/(J025119)
				– Grooved	J011921/(TBA)	-	-	J011922/(TBA)	-	-
				– Flanged	-	J001033/(TBA)	J001034/(TBV)	J001036/(TBA)	J001037/(TBA)	J001038/(J025119)
				4" (100 mm) Reduced Port – Weld	-	-	-	-	J001113/(TBA)	J001110/(J025116)
	1	1	Lube Fitting	Steel	005929-18	005929-18	005929-18	005929-18	005929-18	005929-18
	2	1	Hub Assembly	ASTM A536 Ductile Iron	2139713-01	2139713-01	2139713-01	2139713-01	2139713-01	2139713-01
	4	1	Lock Handle	AISI C1213	J001892	J001892	J001892	J001892	J001892	J001892
■	6	1	Stem Screw	AISI C1213	J001914-002	J001914-002	J001914-002	J001914-003	J001914-003	J001914-003
■	7	1	Stem Screw Seal	Buna-N	J005526-226	J005526-226	J005526-226	J005526-226	J005526-226	J005526-226
	8	1	Screw Housing	Carbon Steel	J001852	J001852	J001852	J001852	J001852	J001852
■	9	1	Stem	303 SS -002, 316 SS -008	J001932-XXX	J001932-XXX	J001932-XXX	J001932-XXX	J001932-XXX	J001932-XXX
■	10	1	Secondary Seal	Buna-N	J005526-212	J005526-212	J005526-212	J005526-212	J005526-212	J005526-212
	11	1	Retainer	AISI C1213	J001941	J001941	J001941	J001941	J001941	J001941
■	12	1	Stem Seal Assembly	Buna-N -001, FKM -006	J001950-XXX	J001950-XXX	J001950-XXX	J001950-XXX	J001950-XXX	J001950-XXX
	16	1	Bonnet	Cast Steel ASTM A487 4A or 2B	J001970-XXX	J001974-XXX	J001974-XXX	J001971-XXX	J001976-XXX	J001980-XXX
				Coatings	Uncoated -030, DEMCO 12 -035					
■•	18	1	Bonnet Seal	Buna-N	J005526-427	J005526-427	J005526-427	J005526-431	J005526-433	J005526-433
				FKM	J005531-427	J005531-427	J005531-427	J005531-431	J005531-433	J005531-433
■•	19	1	Gate		J001868-00X	J001868-00X	J001868-00X	J001886-00X	J001886-00X	J001886-00X
				Materials	AISI 4140 Nickel Plated -002, Cast SS ASTM A351 Grade CF8M -008					
	20	1	Body Materials							
				ASTM A487 Grade 4 Class A or Grade 2 Class B	Consult Cameron for Body Part Numbers					
				Coatings (Except Weld End Bodies): DEMCO 12						
■•	21	1	Seat Assembly		J001877-0XX	J001877-0XX	J001877-0XX	J001878-0XX	J001878-0XX	J001878-0XX
				Materials	Inserts: -001 Ductile Iron ASTM A395 or Steel AISI C1040 -008 316 SS ASTM A351 Grade CF8M Annealed Elastomers: -0X1 Buna-N, -0X2 FKM					
	22	1	Pin, Lock Handle	Steel	J005420-18732	J005420-18732	J005420-18732	J005420-18732	J005420-18732	J005420-18732
	23	2	Bonnet Stud	ASTM A193 Grade B7	J002066	J002066	J002066	J002066	J002066	J002066
	24	2	Bonnet Stud Nut	ASTM A194 Grade 2H	2709000-08-01	2709000-08-01	2709000-08-01	2709000-08-01	2709000-08-01	2709000-08-01
	25	4	Body Stud	ASTM A193 Grade B7	J002072	J002074	J002074	J002072	J002074	J002076
	26	4	Body Stud Nut	ASTM A194 Grade 2H	2709000-09-01	2709000-10-01	2709000-10-01	2709000-09-01	2709000-10-01	2709000-13-01

■ Major repair kit J025216-12221 – One each for one year of service.
• Minor repair kit J025216-02221.
Major and minor repair kits listed for trim option J0XXXXX-XX72140 (410 SS Stem, Steel/QPQ Gate, HNBR Seat/Seals)
Consult Cameron for optional repair kit trim options

SERIES DM GATE VALVES – 2000 AND 3000 PSI WP

4" (100 mm) Full Port

5" (125 mm) Reduced Port

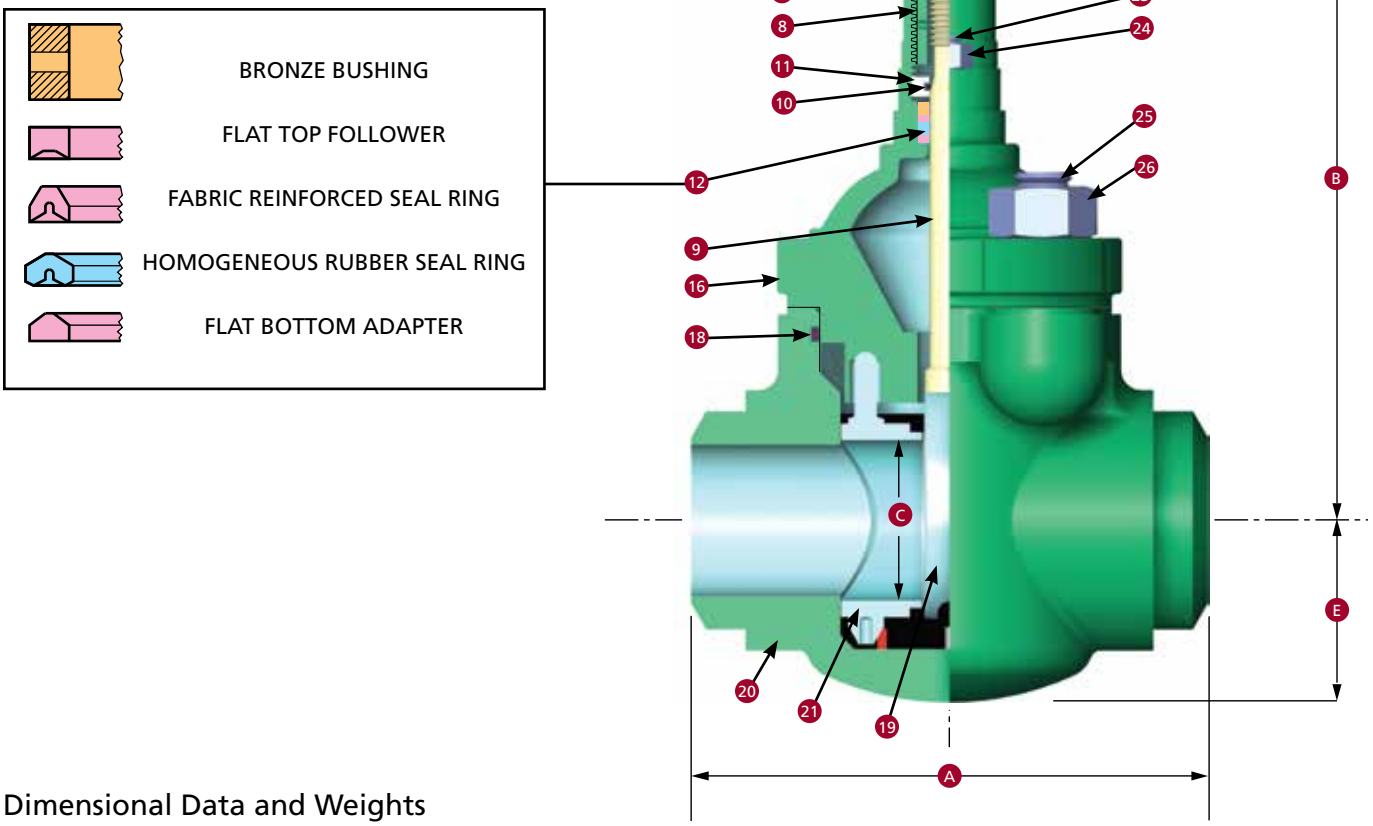

Dimensional Data and Weights

Dimension		Valve Size		
		4" (100 mm) FP 2000 WP	4" (100 mm) FP 3000 WP	5" x 4" (125 mm x 100 mm) RP 3000 WP
A	Threaded, Weld and Grooved	13.00 (330)	13.00 (330)	13.00 (330)
	Flanged – RTJ	16.38 (416)	16.38 (416)	-
B	(Open)	21.25 (540)	21.25 (540)	21.25 (540)
C	(Seat Bore)	4.00 (100)	4.00 (100)	4.00 (100)
D		23.00 (584)	23.00 (584)	23.00 (584)
E	Threaded, Weld and Grooved	4.31 (109)	4.56 (116)	4.56 (116)
	Flanged – RTJ	4.31 (109)	4.56 (116)	-
	Flange OD	10.75 (273)	11.50 (292)	-
	Flange Bolts (Qty., Size: in.)	8 – 7/8	8 – 1-1/8	-
	Ring Number (RTJ)	R-37	R-37	-
Weight lb (kg)				
	Threaded, Weld and Grooved	140 (64)	162 (73)	162 (73)
	Flanged	200 (91)	265 (120)	

ASSEMBLY PART NUMBER

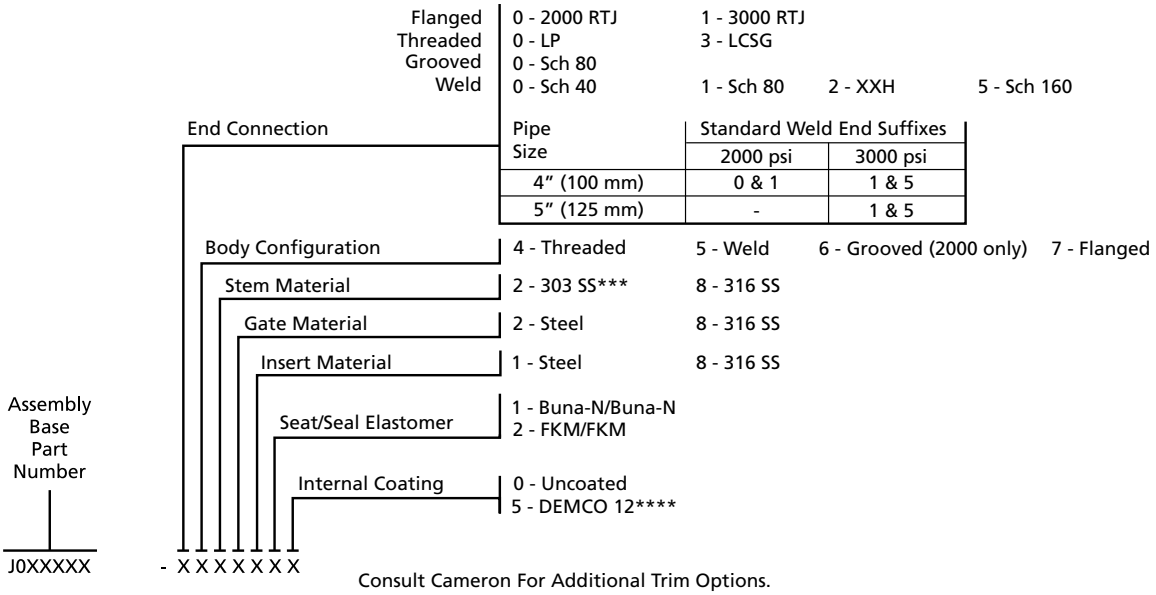

Consult Cameron For Additional Trim Options.
*** Available on General Service valves
****Internal coating only, weld end bodies are not available with internal or external coatings

Parts List

Key No.	Qty.	Description		Valve Size: 4" (100 mm) FP** 2000 WP General/(NACE)	Valve Size: 4" (100 mm) FP and 5" (125 mm) RP 3000 WP General/(NACE)
		Assembly Base	4" (100 mm) Full Port – Threaded	J001048/(TBA)	J001049/(TBA)
		Part Number	– Weld	J001057/(TBA)	J001058/(TBA)
			– Grooved	J011923/(TBA)	-
			– Flanged	J001039/(TBA)	J001040/(TBA)
			5" (125 mm) Reduced Port – Weld	-	J001111/(TBA)
1	1	Lube Fitting	Steel	005929-18	005929-18
2	1	Hub Assembly	ASTM A536 Ductile Iron	2139714-01	2139714-01
4	1	Lock Handle	C-1213	J001897	J001897
■ 6	1	Stem Screw	C-1213	J001915	J001915
■ 7	1	Stem Screw Seal	Buna-N	J005526-227	J005526-227
8	1	Screw Housing	Carbon Steel	J001958	J001958
■ 9	1	Stem	303 SS -002, 316 SS -008	J001933-XXX	J001933-XXX
■ 10	1	Secondary Seal	Buna-N	J005526-214	J005526-214
11	1	Retainer	C-1213	J001942	J001942
■ 12	1	Stem Seal Assembly	Buna-N -001, FKM -006	J001951-XXX	J001951-XXX
16	1	Bonnet	Cast Steel ASTM A487 4A or 2B	J001972-XXX	J001977-XXX
			Coatings	Uncoated -030, DEMCO 12 -035	
■● 18	1	Bonnet Seal	Buna-N	J005526-438	J005526-439
			FKM	J005531-438	J005531-439
■● 19	1	Gate		J001926-00X	J001926-00X
			Materials	AISI 4140 Nickel Plated -002 Cast SS ASTM A351 Grade CF8M Annealed -008	
20	1	Body Materials			
			ASTM A487 Grade 4 Class A or Grade 2 Class B	Consult Cameron for Body Part Numbers	
			Coatings (Except Weld End Bodies): DEMCO 12		
■● 21	1	Seat Assembly		J002207-0XX	J002207-0XX
			Materials	Inserts: -02X Steel AISI 1040 -08X 316 SS ASTM A351 Grade CF8M Annealed Elastomers: -0X1 Buna-N, -0X2 FKM	
22	1	Pin, Lock Handle	Steel	J005420-18732	J005420-18732
23	2	Bonnet Stud	ASTM A193 Grade B7	J002072	J002072
24	2	Bonnet Stud Nut	ASTM A194 Grade 2H	2709000-09-01	2709000-09-01
25	4	Body Stud	ASTM A193 Grade B7	J002074	*J024500
26	4	Body Stud Nut	ASTM A194 Grade 2H	2709000-10-01	*2709000-12-01

■ Major repair kit J025216-13221 – One each for one year of service.
• Minor repair kit J025216-03221.
Major and minor repair kits listed for trim option J0XXXXX-XX72140 (410 SS Stem, Steel/QPQ Gate, HNBR Seat/Seals)
Consult Cameron for optional repair kit trim options
* Valves made prior to 1994 may use seven pitch stud J002075 and nut J053251-042.
** Available as 4-1/16" (103 mm) casing thread 2000 WP-J025020-4422110; 3000 WP-J024968-4422110.

SERIES DM GATE VALVES – 5000 PSI WP – FOUR-BOLT BONNET DESIGN

4″ (100 mm) Full Port

5″ (125 mm) Reduced Port

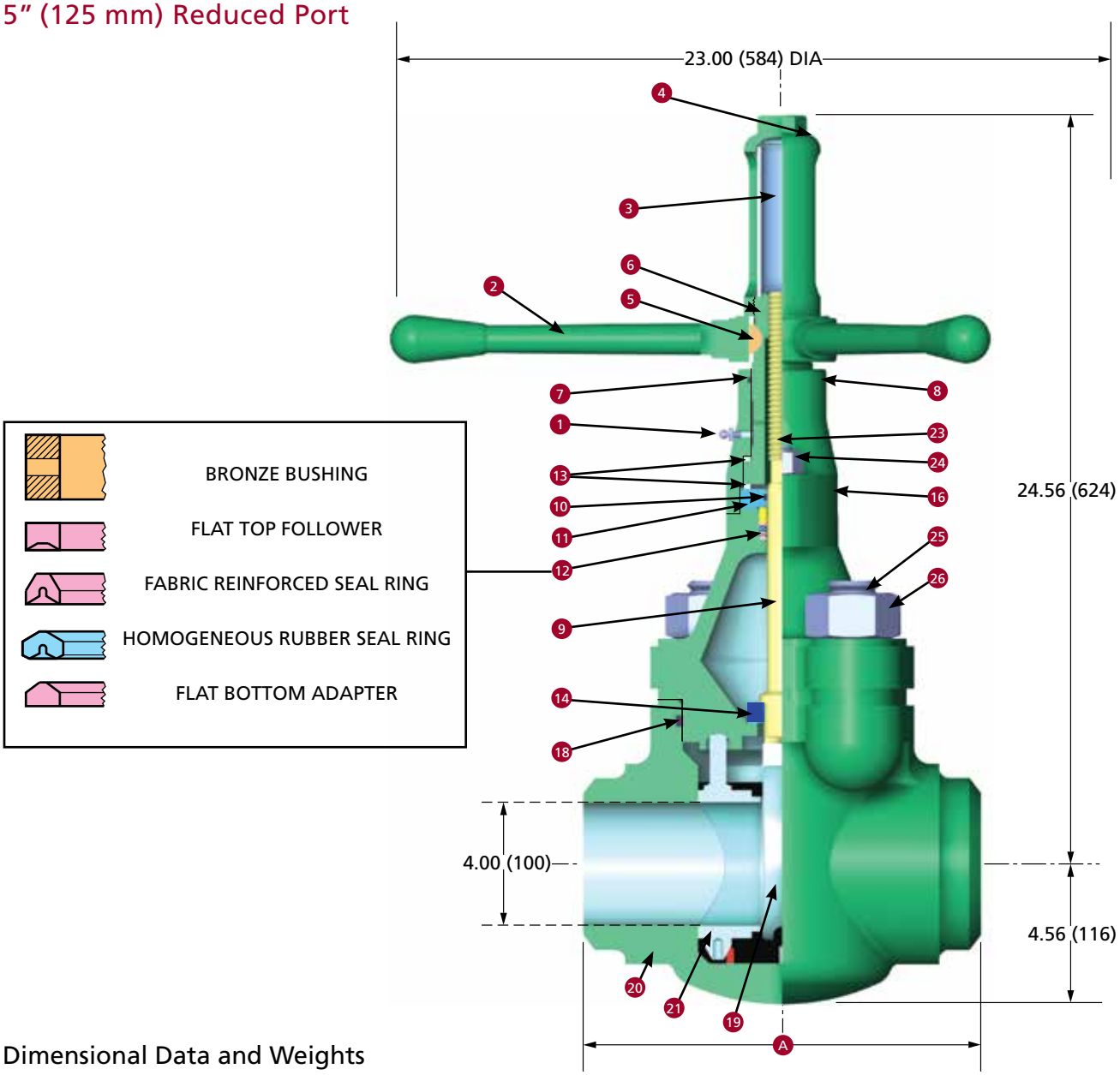

Dimensional Data and Weights

Dimension		Valve Size: 4″ (100 mm) FP 5000 WP	Valve Size: 5″ x 4″ (125 mm x 100 mm) 5000 WP
A	Threaded and Weld	13.00 (330)	13.00 (330)
	Flanged – RTJ	18.00 (457)	-
	Flange OD	12.25 (311)	-
	Flange Bolts (Qty., Size: in.)	8 – 1-1/4	-
	Ring Number (RTJ)	R-39	-
Turns to Open		23	23
Weight lb (kg)			
	Threaded and Weld	210 (95)	210 (95)
	Flanged	330 (150)	-

ASSEMBLY PART NUMBER

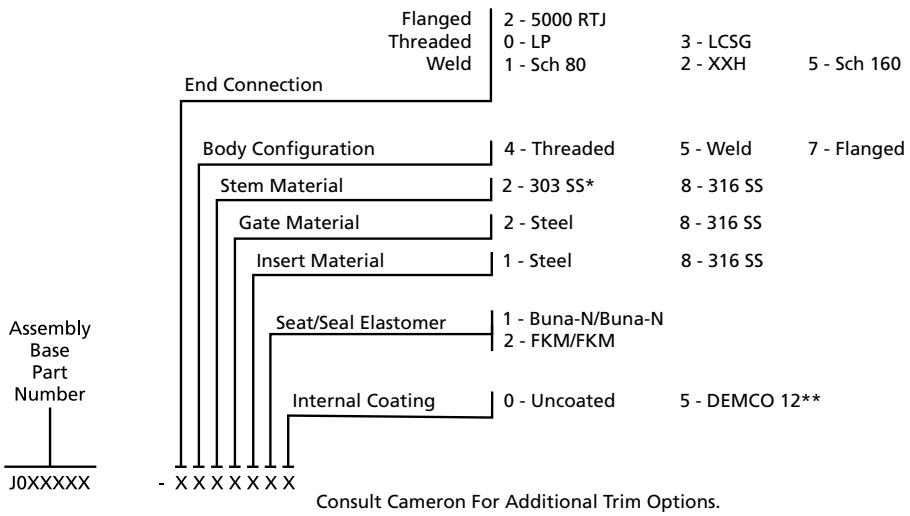

Consult Cameron For Additional Trim Options.
* Available on General Service valves only
**Internal coating only, weld end bodies are not available with internal or external coatings

Parts List

	Key No.	Qty.	Description		Valve Size: 4″ (100 mm) FP 5000 WP General/(NACE)	Valve Size: 5″ (125 mm) 5000 WP General/(NACE)
			Assembly Base Part Number	4″ (100 mm) Full Port	J007420/(J025206)	J007420/(J025206)
				5″ (125 mm) Reduced Port – Weld	J007421/(J025118)	J007421/(J025118)
	1	1	Lube Fitting	Steel	005929-18	005929-18
	2	1	Handle	ASTM A536 Ductile Iron	2139481-01	2139481-01
	3	1	Tube	Clear Acrylic	J007459	J007459
	4	1	Stem Cap	ASTM A536 Ductile Iron	J007411	J007411
■	5	1	Key	Steel	J005305-10016	J005305-10016
■	6	1	Stem Screw	C-1213	J007416	J007416
■	7	1	Stem Screw Seal	Buna-N	J005526-226	J005526-226
	8	1	Screw Housing	C-1029	J007418	J007418
■	9	1	Stem	303 SS -002, 316 SS -008	J007439-XXX	J007439-XXX
■	10	1	Secondary Seal	Buna-N	J005526-214	J005526-214
■	11	1	Retainer	C-1213	J007413	J007413
■	12	1	Stem Seal Assembly	Buna-N	J001951-001	J001951-001
				FKM	J001951-006	J001951-006
■	13	2	Bearing	Teflon/Phenolic	J007426	J007426
■	14	1	Downstop Ring	303 SS	J007417	J007417
	16	1	Bonnet	ASTM A487 Grade 4 Class C or Grade 2 Class B	J007419-XXX	J007419-XXX
				Coatings		Uncoated -030, DEMCO 12 -035
■●	18	1	Bonnet Seal	Buna-N	J005520-439	J005520-439
				FKM	J005531-439	J005531-439
■●	19	1	Gate		J001926-00X	J001926-00X
				Materials		AISI 4140 Nickel Plated -002 ASTM A351 Grade CF8M -008
	20	1	Body Materials			
				ASTM A487 Grade 4 Class A or Grade 2 Class B Coatings (Except Weld End Bodies): DEMCO 12		Consult Cameron for Body Part Numbers
■●	21	1	Seat Assembly		J002207-0XX	J002207-0XX
				Materials		Inserts: -02X Steel AISI 1040 -08X 316 SS ASTM A351 Grade CF8M Annealed Elastomers: -0X1 Buna-N, -0X2 FKM
	23	2	Bonnet Stud	ASTM A193 Grade B7	J002072	J002072
	24	2	Bonnet Stud Nut	ASTM A194 Grade 2H	2709000-09-01	2709000-09-01
	25	4	Body Stud	ASTM A193 Grade B7	J002077	J002077
	26	4	Body Stud Nut	ASTM A194 Grade 2H	J001890	J001890

■ Major repair kit J025216-14221 – One each for one year of service.
• Minor repair kit J025216-04221.
Major and minor repair kits listed for trim option J0XXXXX-XX72140 (410 SS Stem, Steel/QPQ Gate, HNBR Seat/Seals)
Consult Cameron for optional repair kit trim options

SERIES DM GATE VALVES – 5000 PSI WP – 12-BOLT BONNET DESIGN

4″ (100 mm) Full Port

5″ (125 mm) and 6″ (150 mm) Reduced Port

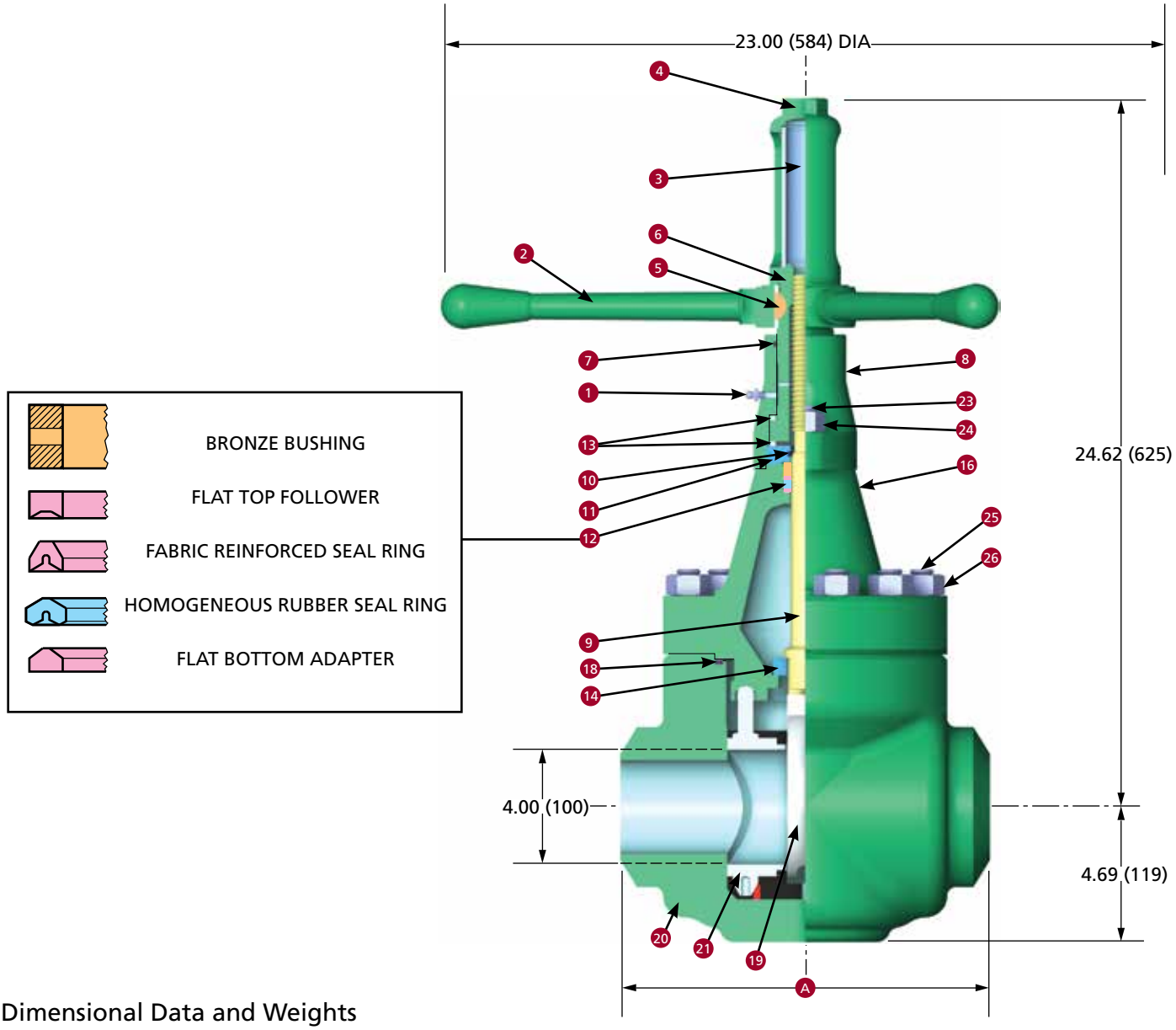

Dimensional Data and Weights

Dimension		Valve Size: 4″ (100 mm) FP 5000 WP	Valve Size: 5″ x 4″ (125 mm x 100 mm) and 6″ x 4″ (150 mm x 100 mm) RP 5000 WP
A	Threaded and Weld	13.00 (330)	13.00 (330)
	Flanged – RTJ	18.00 (457)	-
	Flange OD	12.25 (311)	-
	Flange Bolts (Qty., Size: in.)	8 – 1-1/4	-
	Ring Number (RTJ)	R-39	-
Turns to Open		23	23
Weight lb (kg)			
	Threaded and Weld	210 (95)	210 (95)
	Flanged	330 (150)	-

ASSEMBLY PART NUMBER

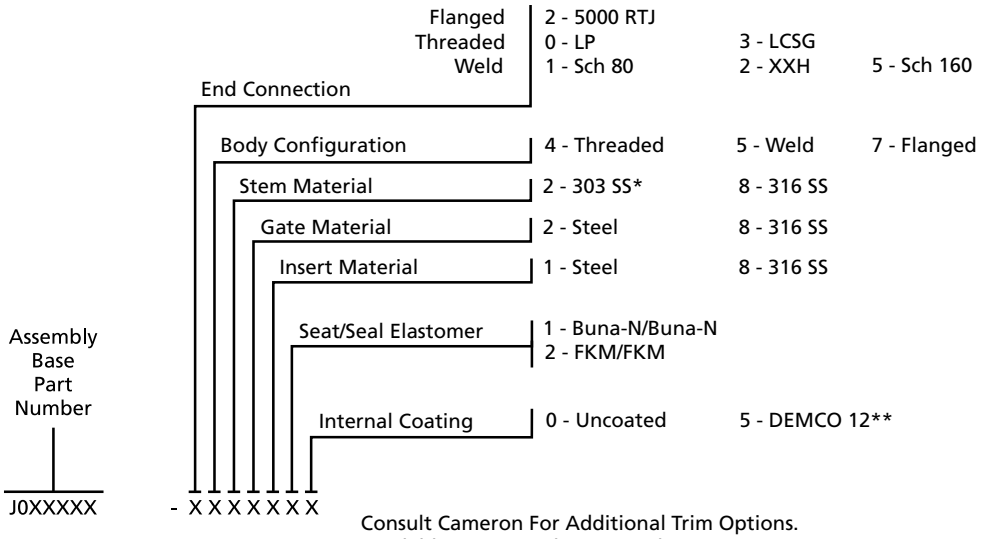

Consult Cameron For Additional Trim Options.
* Available on General Service valves
**Internal coating only, weld end bodies are not available with internal or external coatings

Parts List

	Key No.	Qty.	Description		Valve Size: 4" (100 mm) FP 5000 WP General/(NACE)	Valve Size: 5" (125 mm) and 6" (150 mm) RP 5000 WP General/(NACE)
			Assembly Base Number	4" (100 mm) Full Port	J017263/(J025207)	J017263/(J025207)
				5" (125 mm) Reduced Port – Weld	J017264/(J025122)	J017264/(J025122)
				6" (150 mm) Reduced Port – Weld	J017265/(J024931)	J017265/(J024931)
	1	1	Lube Fitting	Steel	005929-18	005929-18
	2	1	Handle	ASTM A536 Ductile Iron	2139481-01	2139481-01
	3	1	Tube	Clear Acrylic	J007459	J007459
	4	1	Stem Cap	ASTM A536 Ductile Iron	J007411	J007411
■	5	1	Key	Steel	J005305-10016	J005305-10016
■	6	1	Stem Screw	C-1213	J007416	J007416
	7	1	Stem Screw Seal	Buna-N	J005526-226	J005526-226
	8	1	Screw Housing	C-1029	J007418	J007418
■	9	1	Stem	303 SS -002, 316 SS -008	J007439-XXX	J007439-XXX
■	10	1	Secondary Seal	Buna-N	J005526-214	J005526-214
■	11	1	Retainer	C-1213	J007413	J007413
■	12	1	Stem Seal Assembly	Buna-N	J001951-001	J001951-001
				FKM	J001951-006	J001951-006
■	13	2	Bearing	Teflon/Phenolic	J007426	J007426
■	14	1	Downstop Ring	303 SS	J007417	J007417
	16	1	Bonnet	ASTM A487 Grade 4 Class C	J017289-XXX	J017289-XXX
				Coatings		Uncoated -030, DEMCO 12 -035
■●	18	1	Bonnet Seal	Buna-N	J005520-361	J005520-361
				FKM	J005531-361	J005531-361
■●	19	1	Gate		J001926-00X	J001926-00X
				Materials		AISI 4140 Nickel Plated -002 ASTM A351 Grade CF8M Annealed -008
	20	1	Body Materials			
				ASTM A487 Grade 4 Class A Coatings (Except Weld End Bodies): DEMCO 12		Consult Cameron for Body Part Numbers
■●	21	1	Seat Assembly		J002207-0XX	J002207-0XX
				Materials		Inserts: -02X Steel AISI 1040 -08X 316 SS ASTM A351 Grade CF8M Annealed Elastomers: -0X1 Buna-N, -0X2 FKM
	23	2	Bonnet Stud	ASTM A193 Grade B7	J002072	J002072
	24	2	Bonnet Stud Nut	ASTM A194 Grade 2H	2709000-09-01	2709000-09-01
	25	12	Body Stud	ASTM A193 Grade B7	J015432	J015432
	26	12	Body Stud Nut	ASTM A194 Grade 2H	2709000-10-01	2709000-10-01

■ Major repair kit J025216-14221 – One each for one year of service.
• Minor repair kit J025216-04221.
Major and minor repair kits listed for trim option J0XXXXX-XX72140 (410 SS Stem, Steel/QPQ Gate, HNBR Seat/Seals)
Consult Cameron for optional repair kit trim options

SERIES DM GATE VALVES – 3000 AND 5000 PSI WP

5″ (125 mm) Full Port

6″ (150 mm) x 5″ (125 mm) Reduced Port

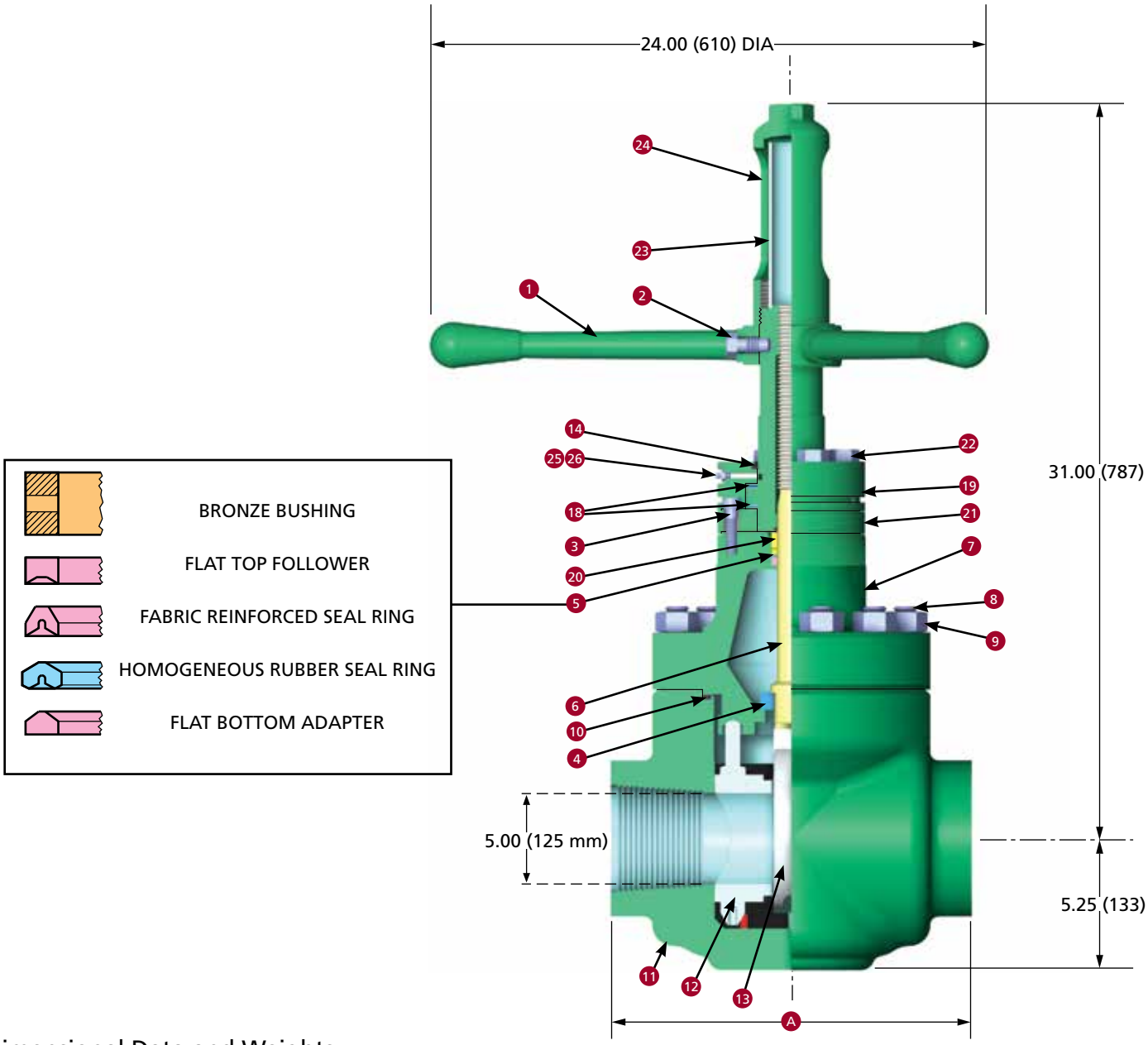

Dimensional Data and Weights

Dimension		Valve Size: 5″ (125 mm) FP and 6″ x 5″ (150 mm x 125 mm) RP
		3000 and 5000 WP
A	Threaded and Weld	16.00 (406)
Weight lb (kg)		335 (152)

ASSEMBLY PART NUMBER

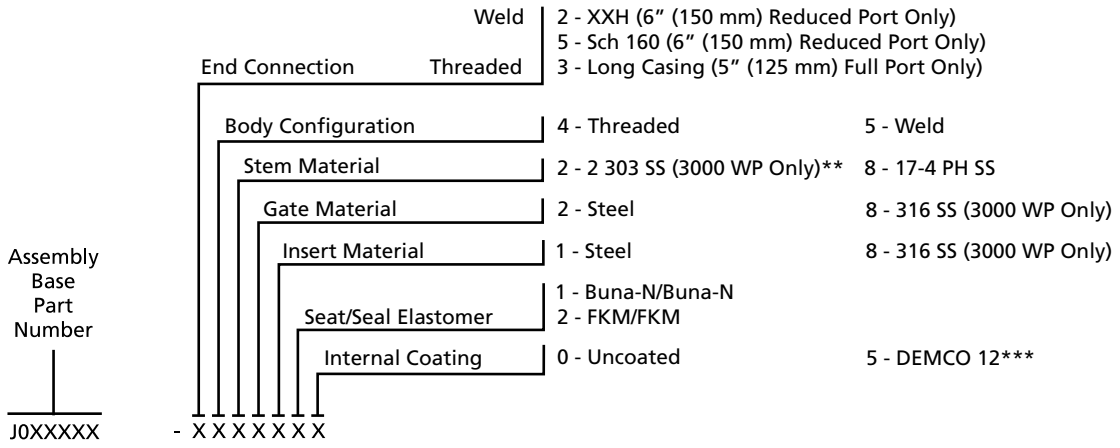

** Available on General Service valves only
***Internal coating only, weld end bodies are not available with internal or external coatings

Parts List

	Key No.	Qty.	Description		Valve Size: 5" (125 mm) FP 3000 WP General/(NACE)	Valve Size: 6" (150 mm) x 5" (125 mm) RP 5" (125 mm) FP 5000 WP General/(NACE)
			Assembly Base Part Number	Full Port – Threaded	J021954/(TBA)	J023925/(TBA)
				Reduced Port – Weld	-	J025086/(TBA)
	1	1	Handwheel	Ductile Iron ASTM A536 Grade 65-45-12	2227656-01	
	2	1	Screw – Handwheel	Steel AISI C1018	J014832	
	3	4	Screw – Retainer	Alloy Steel	J005665-32028	
	4	1	Downstop Ring	Steel AISI C1018	J021942	
*	5	1	Stem Seal Assembly w/Bushing	-001 Buna-N, -006 FKM	J015853-00X	
	6	1	Stem	-002 303 SS -009, 17-4 pH SS	J021943-00X	J021943-009
	7	1	Bonnet	Cast Steel ASTM A487 Grade 4 Class C	J021944-03X	
				Coatings	Uncoated -030, DEMCO 12 -035	
	8	12	Body Stud	Steel ASTM A193 Grade B7	J015432	
	9	12	Body Stud Nut	Steel ASTM A194 Grade 2H	2709000-10-01	
*	10	1	Bonnet Seal	Buna-N	J005526-367	
				FKM	J005531-367	
	11	1	Body Materials			
				ASTM A487 Grade 4 Class A	Consult Cameron for	
				Coatings (Except Weld End Bodies): DEMCO 12	Body Part Numbers	
*	12	1	Seat Assembly		J021948-011	J021948-019
					J021948-012	-
					J021948-081	-
					J021948-082	-
				Materials	Inserts: -01X Steel AISI 1040, -08X 316 SS (3000 WP Only)	
					Elastomers: -0X1 Buna-N, -0X2 FKM, -0X9 90 Duro Buna-N	
*	13	1	Gate	-002 Steel AISI 4140 Nickel Plated, 008 316 SS (3000 WP Only)	J021952-00X	J021952-002
	14	1	Stem Screw Seal	Buna-N	J005526-228	
	18	1	Stem Screw w/Bearings	Steel AISI C1018, Steel Bearings	J023888	-
				AL. BRZ. ASTM B148 Alloy 955, Steel Bearings	-	J024526
	19	1	Housing	Steel AISI C1018	J015332	
	20	1	Secondary Seal	Buna-N	J005526-216	
	21	1	Retainer	Steel AISI C1018	J015330	
	22	4	Screw – Housing	Steel	J005650-32056	
	23	1	Tube	Clear Acrylic	J012852	
	24	1	Stem Cap	Ductile Iron ASTM A536 Grade 65-45-12	J015855	
	25	1	Lube Fitting	Steel	005929-18	
	26	1	Relief Fitting	Steel	J051971	

* Recommended spare parts – One each for one year of service.

SERIES DM GATE VALVES – ASME CLASS 600

2″ (50 mm) Full Port

2″ (50 mm) Reduced Port for General Service Conditions

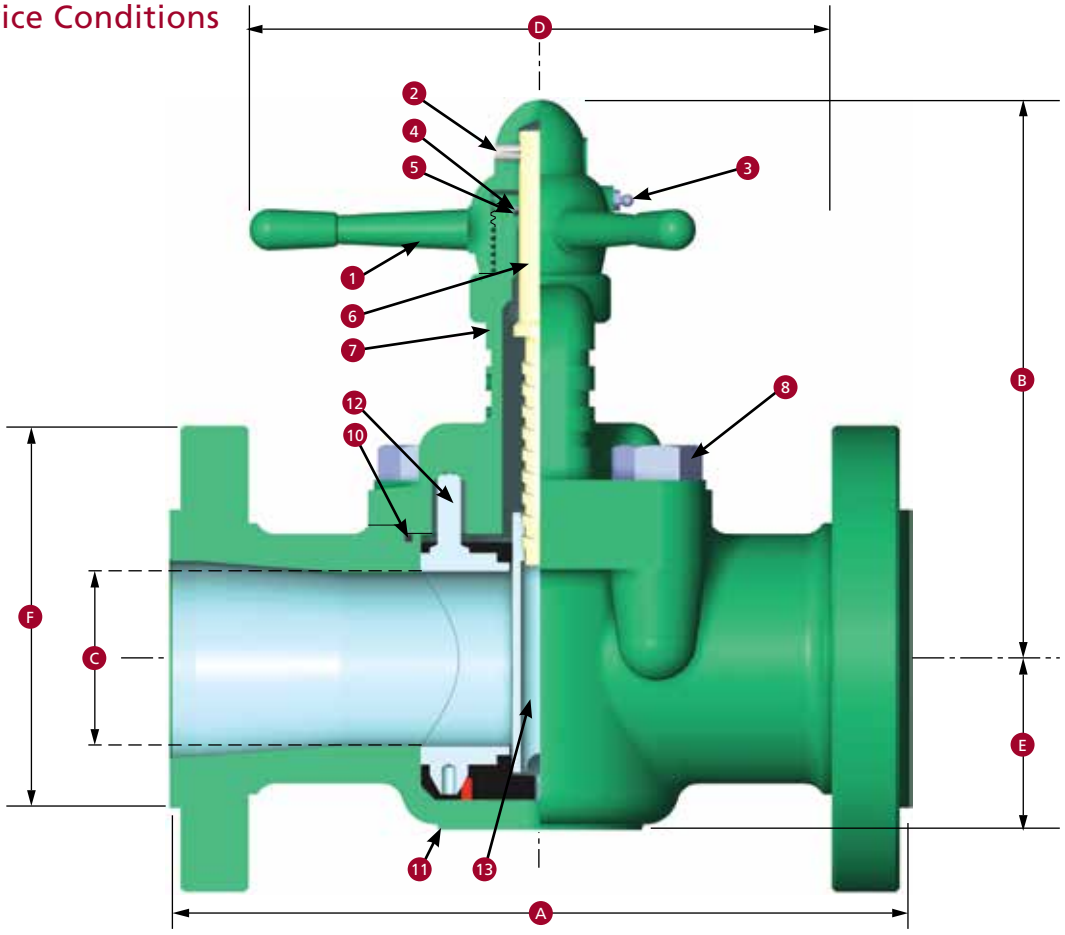

Dimensional Data and Weights

Dimension		Valve Size: 2″ x 1-1/2″ (50 mm x 40 mm) RP	Valve Size: 2″ (50 mm) FP
		ASME Class 600	ASME Class 600
A	Full Port – Threaded, Weld and Grooved	7.75 (197)	8.88 (226)
	Reduced Port – Threaded	-	7.75 (197)
	Flanged – RF	-	11.50 (292)
	Flanged – RTJ	-	11.62 (295)
B	(Open) – Full Port	7.75 (197)	8.75 (222)
	(Open) – Reduced Port	-	7.75 (197)
C	(Seat Bore) – Full Port	1.62 (41)	2.00 (50)
	(Seat Bore) – Reduced Port	-	1.62 (41)
D	Full Port	9.50 (241)	11.00 (279)
	Reduced Port	-	9.50 (241)
E	Full Port	2.00 (50)	2.19 (56)
	Reduced Port	-	2.00 (50)
F	Flange OD	-	6.50 (165)
	Flange Bolts (Qty., Size: in.)	-	8 – 5/8
	Ring Number (RTJ)	-	R-23
Weight lb (kg)			
	Full Port – Threaded, Weld and Grooved	20 (9)	26 (12)
	Reduced Port – Threaded	-	20 (9)
	Full Port – Flanged	-	44 (20)
	Reduced Port – Flanged	-	40 (18)

ASSEMBLY PART NUMBER

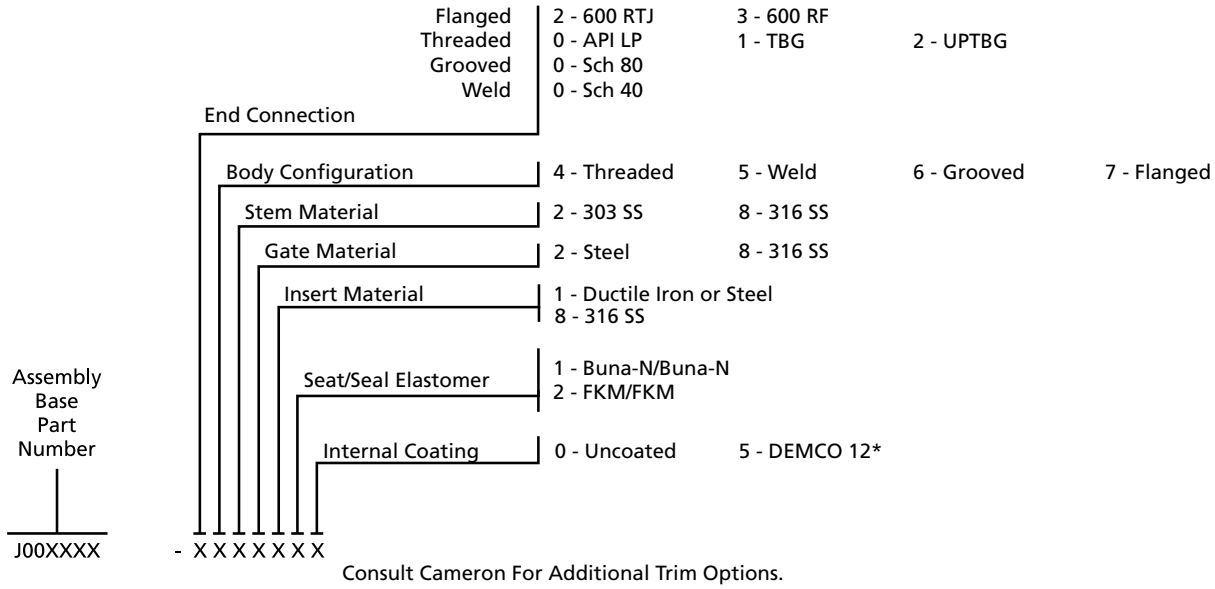

Consult Cameron For Additional Trim Options.
*Internal coating only, weld end bodies are not available with internal or external coatings

Parts List

Key No.	Qty.	Description		Valve Size: 2″ x 1-1/2″ RP (50 mm x 40 mm) RP ASME Class 600	Valve Size: 2″ FP (50 mm) FP ASME Class 600
		Assembly Base Part Number	Full Port – Threaded	J003938	J001072
			– Weld	-	J001092
			– Grooved	-	J001082
			– Flanged	-	J001062
1	1	Handle	Ductile Iron ASTM A536 Grade 65-45-12	J004375	J001276
2	1	Stem Pin	Spring Steel	J005445-25020	J005445-37528
3	1	Lube Fitting	Steel	005929-18	005929-18
4	1	Backup Ring	Chrome Leather	J005532-115	J005532-211
5	1	Stem Seal	Buna-N	J005526-115	J005526-211
			FKM	J005531-115	J005531-211
6	1	Stem	303 SS -002, 316 SS -008	J004376-XXX	J001279-XXX
7	1	Bonnet	Ductile Iron ASTM A395	-	-
			Steel ASTM A216 Grade WCB	J004330-02X	J001277-02X
			Coatings	Uncoated -0X0 DEMCO 12 -0X5	
8	4	Body Screw	SAE Grade 5	J005651-32024	J005651-32024
10	1	Bonnet Seal	Buna-N	J005526-234	J005526-239
			FKM	J005531-234	J005531-239
11	1	Body Materials		Consult Cameron for Body Part Numbers	
			2″ (50 mm) Full Class 400 Threaded, Grooved and Flanged: Ductile Iron ASTM A395		
			2″ (50 mm) Full Class 600 Threaded, Weld and Grooved: Forged Steel AISI C1029 Normalized		
			All Others: Steel, ASTM A216 Grade WCB		
			Coatings (Except Weld End Bodies): DEMCO 12		
12	1	Seat		J004081-0XX	J001876-0XX
			Materials	Inserts: -01X Ductile Iron ASTM A395 or Steel AISI 1040 -08X Stainless Steel ASTM A351 Grade CF8M Annealed Elastomers: -0X1 Buna-N, -0X2 FKM	
13	1	Gate		J004393-00X	J001275-00X
			Materials: -002 Steel, Nickel Plated	AISI C1144	AISI C1045
			-008 Stainless Steel	AISI 316 Annealed	ASTM A351 CF8M Annealed

SERIES DM GATE VALVES – ASME CLASS 600

2-1/2″ (65 mm) through 6″ (150 mm) Full Port

8″ (200 mm) Reduced Port for General Service Conditions

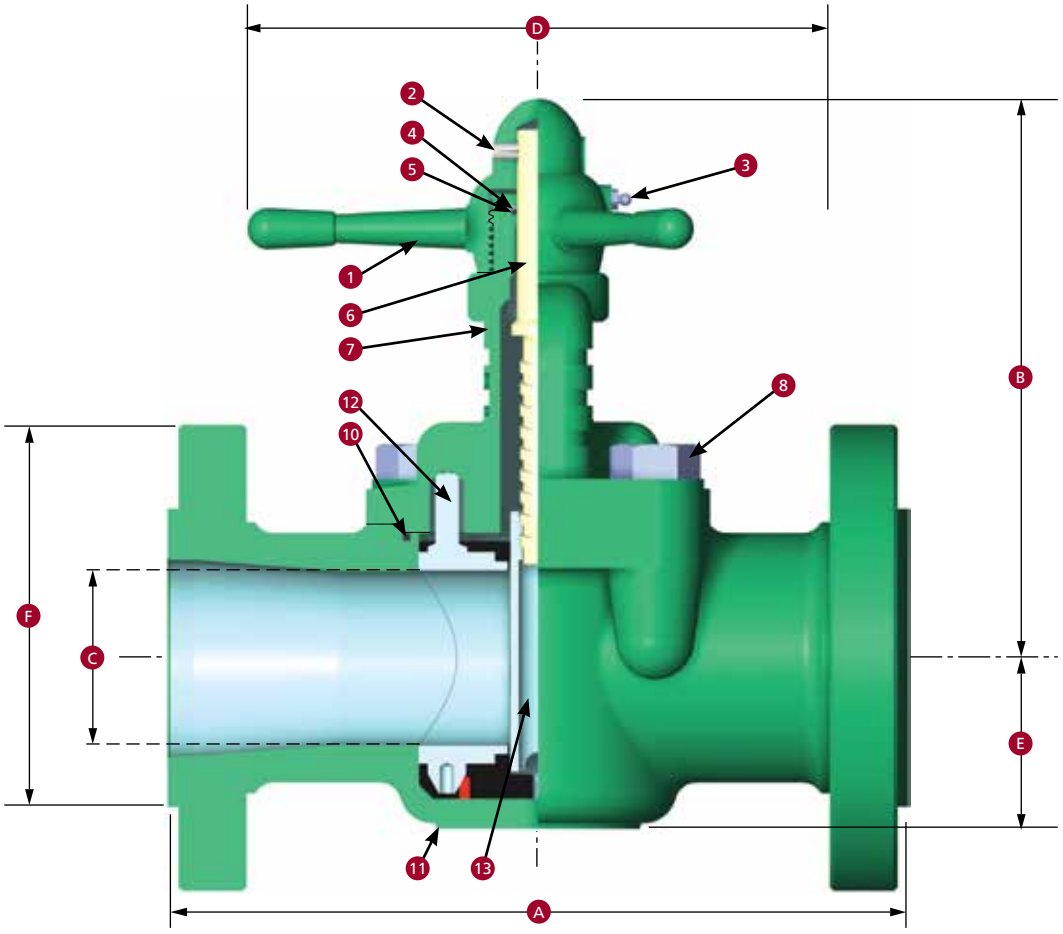

Dimensional Data and Weights

Dimension		2-1/2″ (65 mm) FP ASME Class 600	3″ (80 mm) FP ASME Class 600	4″ (100 mm) FP ASME Class 600	6″ (150 mm) FP ASME Class 600	8″ x 6″ (200 x 150 mm) RP ASME Class 600
A	Threaded, Weld and Grooved	10.00 (254)	10.25 (260)	11.88 (302)	15.50 (394)	-
	Flanged – RF	13.00 (330)	14.00 (356)	17.00 (432)	22.00 (559)	26.00 (660)
	Flanged – RTJ	13.12 (333)	14.12 (359)	17.12 (435)	22.12 (562)	26.12 (663)
B	(Open) – Full Port	10.62 (270)	11.38 (289)	13.88 (353)	19.25 (489)	-
	(Open) – Reduced Port	-	-	-	-	19.25 (489)
C	(Seat Bore) – Full Port	2.50 (65)	3.00 (80)	4.00 (100)	6.00 (150)	-
	(Seat Bore) – Reduced Port	-	-	-	-	6.00 (150)
D	Full Port	12.62 (321)	12.62 (321)	14.25 (362)	24.00 (610)	-
	Reduced Port	-	-	-	-	24.00 (610)
E	Full Port	2.75 (70)	3.19 (81)	3.94 (100)	5.62 (143)	-
	Reduced Port	-	-	-	-	5.62 (143)
F	Flange OD	7.50 (191)	8.25 (210)	10.75 (273)	14.00 (356)	16.50 (419)
	Flange Bolts (Qty., Size: in.)	8 – 3/4	8 – 3/4	8 – 7/8	12 – 1	12 – 1-1/8
	Ring Number (RTJ)	R-26	R-31	R-37	R-45	R-49
Weight lb (kg)						
	FP – Threaded, Weld and Grooved	48 (22) 50 (23)	58 (26) 60 (27)	98 (44)	310 (141)	-
	FP – Flanged	70 (32) 74 (34)	90 (41) 96 (44)	176 (80)	428 (194)	-
	RP – Flanged	- -	- -	-	-	590 (268)

ASSEMBLY PART NUMBER

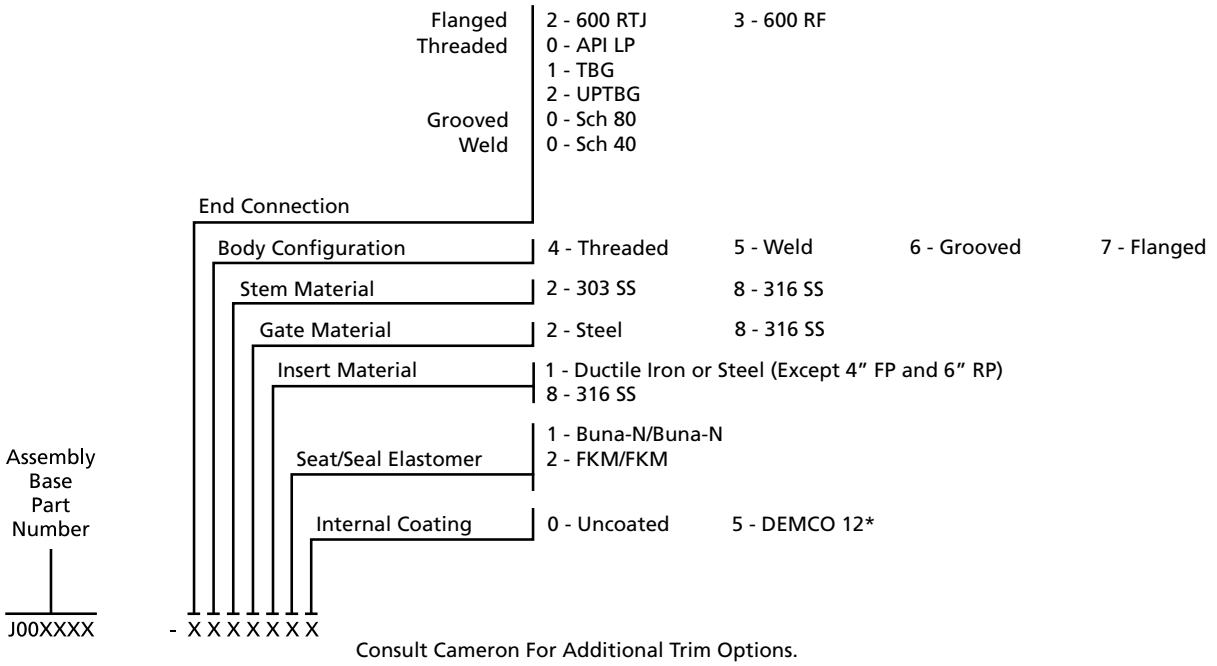

Consult Cameron For Additional Trim Options.
*Internal coating only, weld end bodies are not available with internal or external coatings

Parts List

Key No.	Qty.	Description	Valve Size 2-1/2" (65 mm) FP ASME Class 600	Valve Size 3" (80 mm) FP ASME Class 600	Valve Size 4" (100 mm) FP ASME Class 600	Valve Size 6" (150 mm) FP 8" (200) RP ASME Class 600
		Assembly Base Part Number Full Port – Threaded	J001074	J001076	J001078	J001080
		– Weld	J001094	J001096	J001098	J001100
		– Grooved	J001084	J001086	J001088	J001090
		– Flanged	J001064	J001066	J001068	J001070
		Reduced Port – Flanged	-	-	-	J003945
1	1	Handle Ductile Iron ASTM A536 Grade 65-45-12	J001290	J001290	J001849	J001850
2	1	Stem Pin Spring Steel	J005445-37528	J005445-37528	J005445-37532	J005445-37532
3	1	Lube Fitting Steel	005929-18	005929-18	005929-18	005929-18
4	1	Backup Ring Chrome Leather	J005532-212	J005532-212	J005532-214	J005532-214
5	1	Stem Seal Buna-N	J005526-212	J005526-212	J005526-214	J005526-214
		FKM	J005531-212	J005531-212	J005531-214	J005531-214
6	1	Stem 303 SS -002, 316 SS -008	J001291-XXX	J001291-XXX	J001853-XXX	J001854-XXX
7	1	Bonnet ASTM A395 Ductile Iron	-	J001856-01X	- J001857-01X	- J001858-01X -
		ASTM A216 Grade WCB	J001293-02X	-	J001856-02X - J001857-02X	- J001858-02X
		Coatings	Uncoated -0X0, DEMCO 12 -0X5			
8	4	Body Stud ASTM A193 Grade B7	J002066	J001861	J001862	J001863
9	4	Body Stud Nut ASTM A194 Grade 2H	2709000-08-01	2709000-09-01	2709000-10-01	2709000-14-01
10	1	Bonnet Seal Buna-N	J005526-245	J005526-249	J005526-258	J005526-446
		FKM	J005531-245	J005531-249	J005531-258	J005531-446
11	1	Body Materials Class 400 3" (80 mm) Full Port through 6" (150 mm) Full Port Threaded, Grooved and Flanged: Ductile Iron ASTM A395 All Others: Steel, ASTM A216 Grade WCB Coatings (Except Weld End Bodies): DEMCO 12	Consult Cameron For Body Part Numbers			
12	1	Seat	J001877-0XX	J001878-0XX	J002207-0XX	J001880-0XX
		Materials	Inserts: -01X Ductile Iron ASTM A395 or Steel AISI 1040 2-1/2", 3", 6" -02X Steel AISI 1040 4" -08X Stainless Steel ASTM A351 Grade CF8M Annealed Elastomers: -0X1 Buna-N, -0X2 FKM			
13	1	Gate	J001881-00X	J001882-00X	J001883-00X	J001884-00X
		Materials	-002 Steel AISI 1045, Nickel Plated, -008 316 SS Annealed			

SERIES DM GATE VALVES – ASME CLASSES 900 AND 1500

2″ (50 mm) through 6″ (150 mm) Full Port

2″ (50 mm) through 3″ (80 mm) Full Port

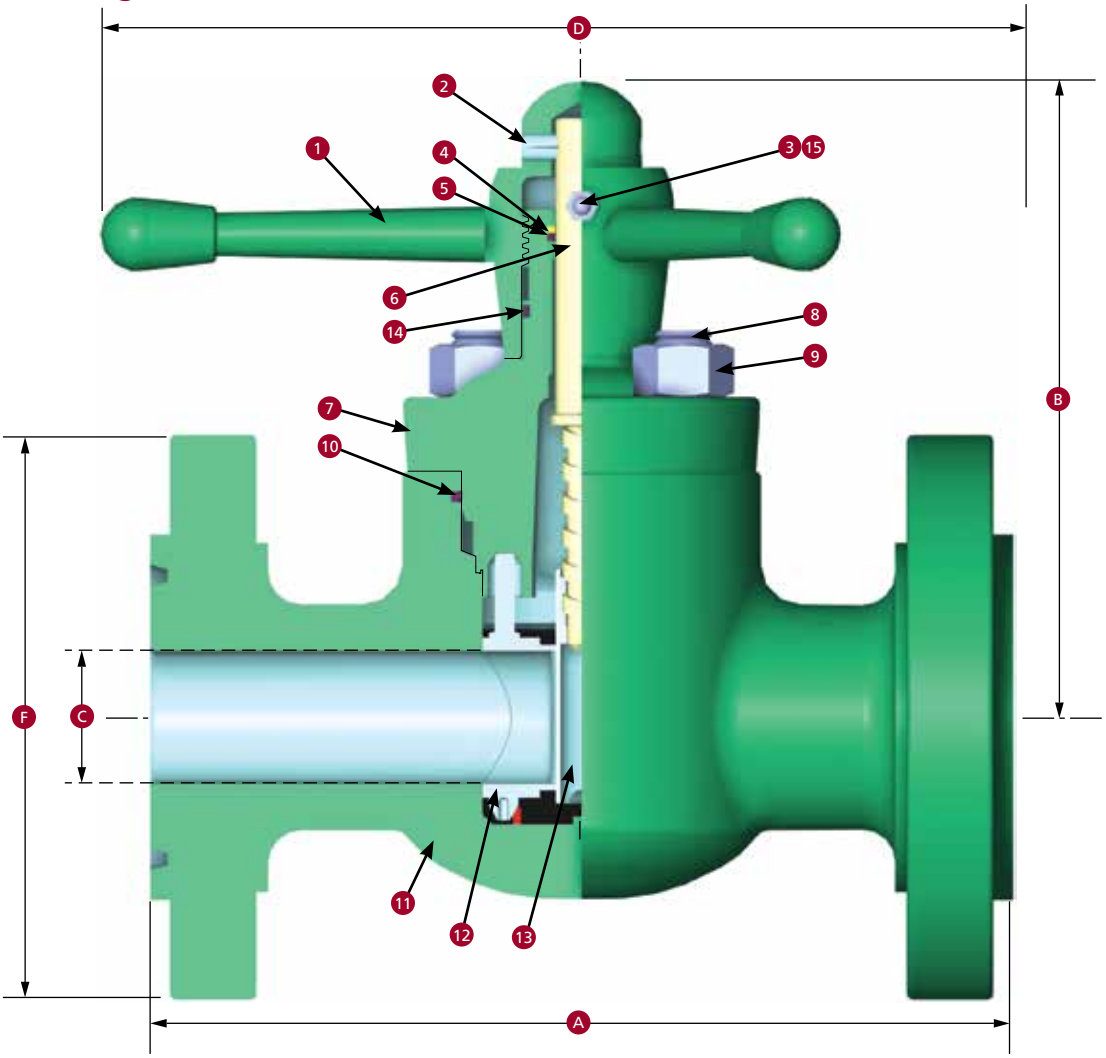

Dimensional Data and Weights

Dimension		Valve Size					
		2″ (50 mm) FP	2-1/2″ (65 mm) FP	3″ (80 mm) FP		4″ (100 mm) FP	6″ (150 mm) FP
		ASME Class 1500	ASME Classes 900 and 1500	ASME Class 900	ASME Class 1500	ASME Class 900	ASME Class 900
A	Threaded, Weld and Grooved N/A*	-	9.75 (248)	11.00 (279)	11.00 (279)	13.00 (330)	20.00 (508)
	Flanged – RF	14.50 (368)	16.50 (419)	15.00 (381)	18.50 (470)	18.00 (457)	24.00 (610)
	Flanged – RTJ	14.62 (371)	16.62 (422)	15.12 (384)	18.62 (473)	18.12 (460)	24.12 (613)
B	Open	9.88 (251)	22.88 (581)	12.75 (324)	12.75 (324)	15.00 (381)	19.25 (489)
C	Seat Bore	2.00 (50)	2.50 (65)	3.00 (80)	3.00 (80)	4.00 (100)	6.00 (150)
D		14.50 (368)	19.00 (483)	19.00 (483)	19.00 (483)	23.00 (584)	24.00 (610)
F	Flange OD	8.50 (216)	9.62 (244)	9.50 (241)	10.50 (267)	11.50 (292)	15.00 (381)
	Flange Bolts (Qty., Size: in.)	8 – 7/8	8 – 1	8 – 7/8	8 – 1-1/8	8 – 1-1/8	12 – 1-1/8
	Ring Number (RTJ)	R-24	R-27	R-31	R-35	R-37	R-45
Weight lb (kg)							
	Threaded, Weld and Grooved N/A*	48 (22)	87 (39)	95 (43)	113 (51)	140 (64)	325 (147)
	Flanged	100 (45)	170 (77)	160 (73)	205 (93)	230 (104)	540 (245)

* Refer to 2000, 3000, and 5000 threaded, weld, and grooved end on pages 22 and 23.

ASSEMBLY PART NUMBER

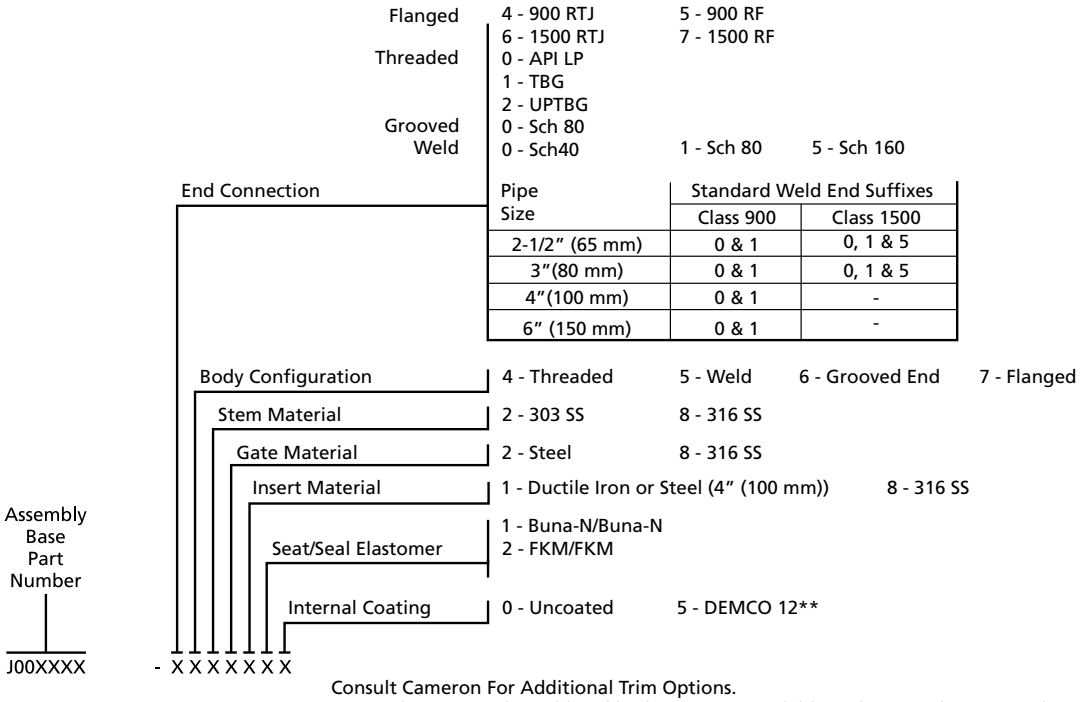

Consult Cameron For Additional Trim Options.
**Internal coating only, weld end bodies are not available with internal or external coatings

Parts List

Key No.	Qty.	Description		Valve Size: 2" (50 mm) FP ASME Class 900	2" (50 mm) FP ASME Class 1500	2-1/2" (65 mm) FP ASME Class 900	2-1/2" (65 mm) FP ASME Class 1500	3" (80 mm) FP ASME Class 900	3" (80 mm) FP ASME Class 1500	4" (100 mm)FP ASME Class 900	6" (150 mm) FP ASME Class 900
		Assembly Base Part Number		J003947	J003948	J003951	J003952	J003953	J003957	J003955	J003999
1	1	Handle	Ductile Iron ASTM A536 Grade 65-45-12	J023661		J0018195		J0018195		J023663	J001850
2	1	Stem Pin	Spring Steel	J005445-37528		J005445-37528		J005445-37528		J005445-37532	
3	1	Lube Fitting	Steel	005929-18		005929-18		005929-18		005929-18	
4	1	Backup Ring	Chrome Leather	J005532-211		J005532-212		J005532-212		J005532-214	
* 5	1	Stem Seal	Buna-N	J005526-211		J005526-212		J005526-212		J005526-214	
			FKM	J005531-211		J005531-212		J005531-212		J005531-214	
6	1	Stem	303 SS -002, 316 SS -008	J004395-XXX		J004396-XXX		J004396-XXX		J004397-00X	J001854-00X
7	1	Bonnet	ASTM A487 Grade 4 Class A	J004320-03X		J004322-03X		J004324-03X	J004326-03X	J004328-03X	J001780-03X
			Coatings	Uncoated -030, DEMCO 12 -035							
8	4	Body Stud		J002072		J002074		J002072	J002074	J002074	J002077
9	4	Body Stud Nut	ASTM A194 Grade 2H	2709000-09-01		2709000-10-01		2709000-09-01		27090000-10-01	J001890
* 10	1	Bonnet Seal	Buna-N	J005526-342		J005526-427		J005526-431	J005526-433	J005526-438	J005526-446
			FKM	J005531-342		J005531-427		J005531-431	J005531-433	J005531-438	J005531-446
11	1	Body Materials		Consult Cameron for							
			ASTM A487 Grade 4 Class A or Grade 2 Class B	Body Part Numbers							
* 12	1	Seat Assembly		J001876-0XX		J001877-0XX		J001878-0XX		J002207-0XX	J001880-0XX
			Materials	Inserts: -01X Ductile Iron ASTM A395 or Steel AISI 1040							
				-08X 316 SS ASTM A351 Grade CF8M Annealed							
				Elastomers: -0X1 Buna-N, -0X2 FKM							
* 13	1	Gate		J001275-XXX		J001881-XXX		J001882-00X		J001883-00X	J001884-00X
			Materials	-002 Nickel Plated Steel AISI 4145							
				-008 316 SS Wrought Type - 2" (50 mm) Only ASTM A351 CF8M – Others							
14	1	Screw Seal	Buna-N	J005526-222		J005526-234		J005526-224		J005526-226	-
15	1	Relief Fitting	Steel	J005197		J005197		J005197		J005197	-

* Recommended spare parts – one each for one year of service.

SERIES DM GATE VALVES – ASME CLASS 1500

4″ (100 mm) Full Port for General Service Conditions

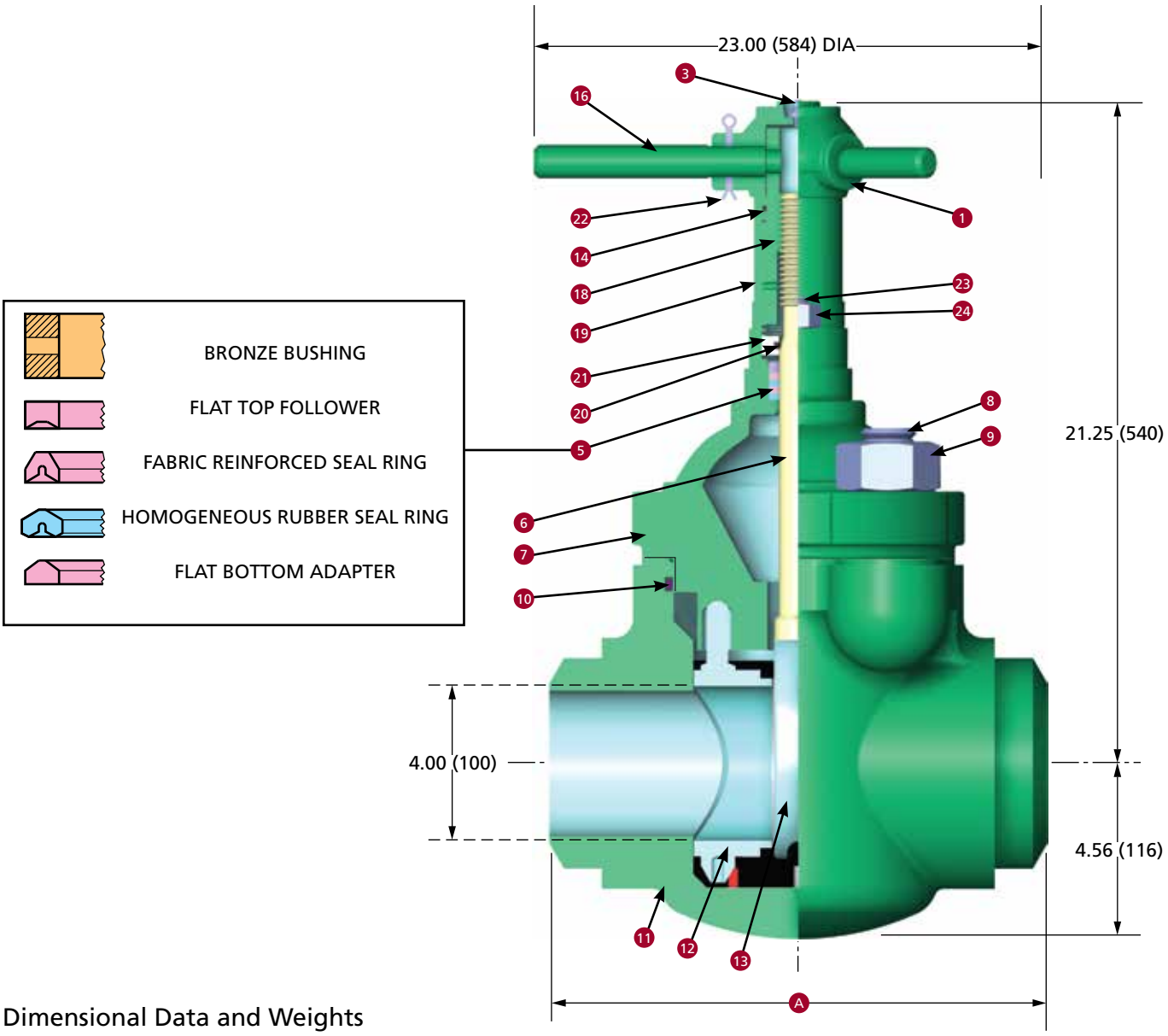

Dimensional Data and Weights

Dimension		Valve Size: 4″ (100 mm) FP ASME Class 1500
A	Threaded and Weld	13.00 (330)
	Flanged – RF	21.50 (546)
	Flanged – RTJ	21.62 (549)
	Flange OD	12.25 (311)
	Flange Bolts (Qty., Size: in.)	8 – 1-1/4
	Ring Number (RTJ)	R-39
Weight lb (kg)		
	Threaded and Weld	162 (73)
	Flanged	320 (145)

ASSEMBLY PART NUMBER

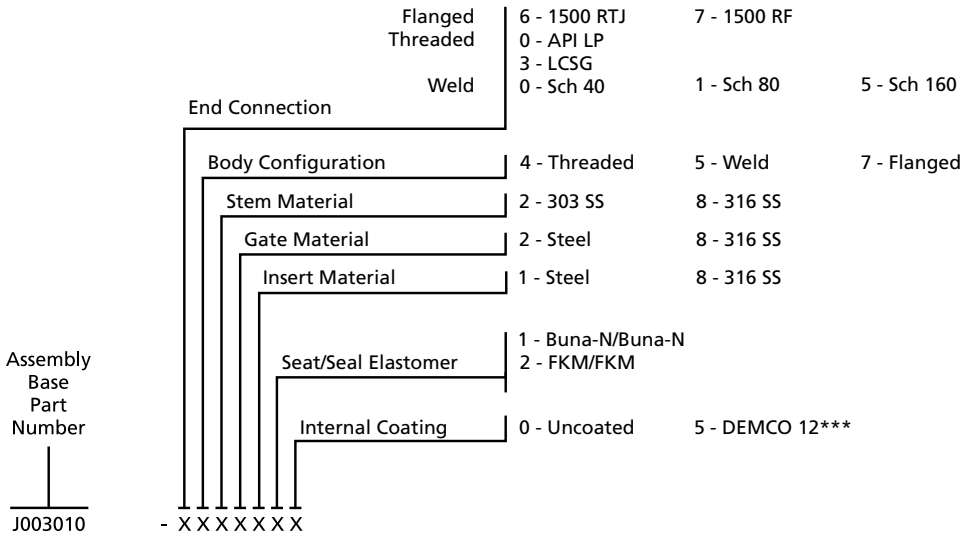

Consult Cameron For Additional Trim Options.
***Internal coating only, weld end bodies are not available with internal or external coatings

Parts List

	Key No.	Qty.	Description		Valve Size: 4" (100 mm) FP ASME Class: 1500
			Assembly Base Part Number		J003010
	1	1	Handle Assembly	Ductile Iron ASTM A536 Grade 65-45-12	2139714-01
	3	1	Lube Fitting	Steel	005929-18
*	5	1	Stem Seal Assembly	Buna-N	J001951-001
				FKM	J001951-006
	6	1	Stem	303 SS -002, 316 SS -008	J001933-XXX
	7	1	Bonnet	ASTM A487 Grade 4 Class A or Class B	J001977-XXX
				Coatings	Uncoated -030, DEMCO 12 -035
	8	4	Body Stud	ASTM A193 Grade B7	**J0024500
	9	4	Body Stud Nut	ASTM A194 Grade 2H	**2709000-12-01
*	10	1	Bonnet Seal	Buna-N	J005526-439
				FKM	J005531-439
	11	1	Body Materials		Consult Cameron for
				ASTM A487 Grade 4 Class A or Grade 2 Class B	Body Part Numbers
*	12	1	Seat		J002207-0XX
				Materials	Inserts: -02X Steel AISI 1040
					-08X 316 SS ASTM A351 Grade CF8M Annealed
					Elastomers: -0X1 Buna-N, -0X2 FKM
*	13	1	Gate		J001926-XXX
				Materials	-002 AISI 4140 Nickel Plated
					-008 ASTM A351 Grade CF8M
	14	1	Screw Seal	Buna-N	J005526-227
	16	1	Lock Handle	AISI C1213	J001897
	18	1	Stem Screw	AISI C1213	J001915
	19	1	Screw Housing	AISI 1029	J001958
*	20	1	Secondary Seal	Buna-N	J005526-214
	21	1	Retainer	AISI C1213	J001942
	22	1	Pin, Lock Handle	Steel	J005420-18732
	23	2	Bonnet Stud	ASTM A193 Grade B7	J002072
	24	2	Body Stud Nut	ASTM A194 Grade 2H	2709000-09-01

* Recommended spare parts – one each for one year of service.
** Valves made prior to 1994 may use 7 pitch stud J002075 and nut J053251-042.

SERIES DT GATE VALVES – ASME CLASSES 600, 900, AND 1500

2″ (50 mm) Full Port NACE Compliant

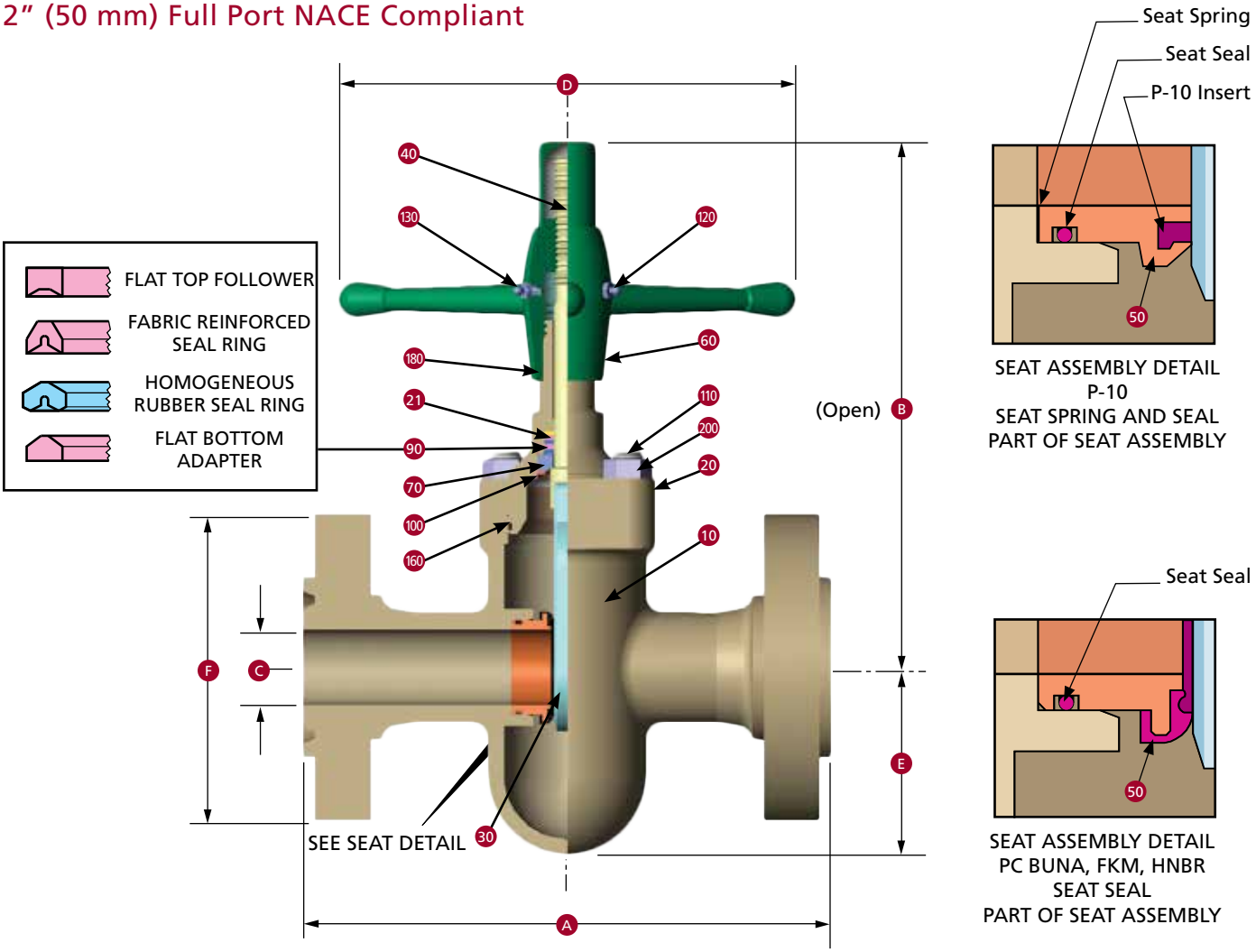

Dimensional Data and Weights

Dimension		Valve Size: 2″ (50 mm) FP		
		ASME Class 600	ASME Class 900	ASME Class 1500
A	Threaded	-	8.50 (216)	8.50 (216)
	Flanged – RF	11.50 (292)	14.50 (368)	14.50 (368)
	Flanged – RTJ	11.62 (295)	14.62 (371)	14.62 (371)
B	(Open)	15.54 (395)	15.54 (395)	15.54 (395)
C	(Seat Bore)	2.06 (52)	2.06 (52)	2.06 (52)
D		14.50 (368)	14.50 (368)	14.50 (368)
E		5.00 (127)	5.25 (133)	5.25 (133)
F	Flange OD	6.50 (165)	8.50 (216)	8.50 (216)
	Flange Bolts (Qty., Size: in.)	8 – 5/8	8 – 7/8	8 – 7/8
	Ring Number (RTJ)	R-23	R-24	R-24
Weight lb (kg)				
	Threaded	-	44 (20)	44 (20)
	Flanged	48 (22)	82 (37)	82 (37)

Working Pressure (psi)

End Connection	Material	ASME Class 600	ASME Class 900	ASME Class 1500
Threaded	Bronze	-	2220	3705
	Stainless Steel	-	2220	3705
Flanged	Bronze	1480	2220	3705
	Stainless Steel	1440	2160	3600

ASSEMBLY PART NUMBER

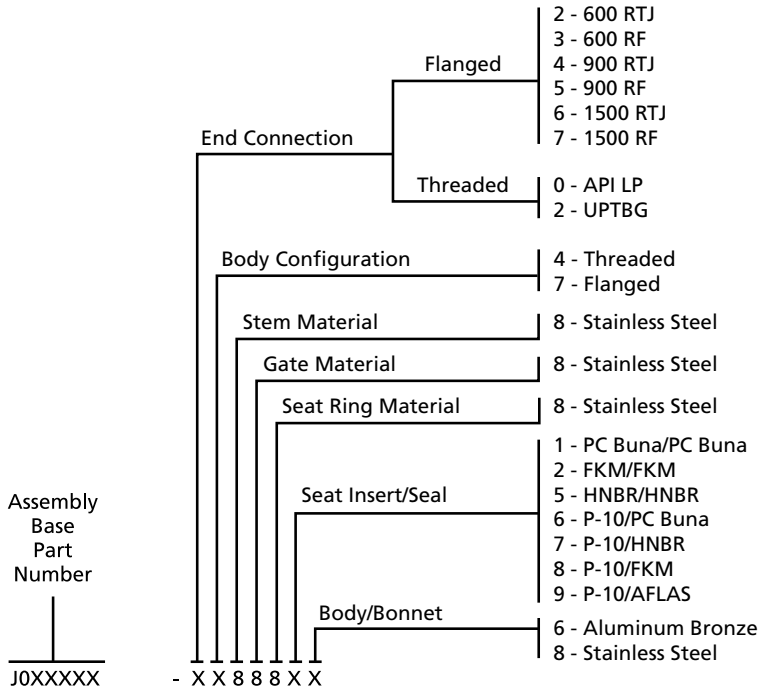

Parts List

Key No.	Qty.	Description		Valve Size: 2" (50 mm) FP ASME Class 600	Valve Size: 2" (50 mm) FP ASME Class 900/1500	Material Specification (See Note 1)
		Assembly Base Part Number		J024997	J024998/J024999	
10	1	Body		Consult Cameron for Body Part Numbers		Aluminum Bronze ASTM B148 Alloy 955 Stainless Steel CF8M
20	1	Bonnet		2060241-11	J024323-060	Aluminum Bronze ASTM B148 Alloy 955
				2060241-12	J024660-080	Stainless Steel CF8M
21	1	Stem Bushing (f/SS Bonnet)		J024661-060		Bronze ASTM B505 Alloy 93200
30	1	Gate	1, 2, 5	J024558-008		Stainless Steel CF8M
		(See Note 2)	6, 7, 8, 9	J024559-008		
40	1	Stem		J024089-008		316 SS
50	2	Seat Assembly	1	2061588-01		Ring: CF8M; Elastomer: Buna-N
		(See Note 2)	2	2061589-01		Ring: CF8M; Elastomer: FKM
			5	2227057-01		Ring: CF8M; Elastomer: HNBR
			6	2061590-01		Ring: CF8M; Insert: PEEK; Seal: Buna-N Spring: INCONEL® X-750
			7	2227058-01		Ring: CF8M; Insert: PEEK; Seal: HNBR Spring: INCONEL X-750
			8	Consult Cameron for Assembly Part Numbers		Ring: CF8M; Insert: PEEK; Seal: HNBR Spring: INCONEL X-750
			9	Consult Cameron for Assembly Part Numbers		Ring: CF8M; Insert: PEEK; Seal: AFLAS Spring: INCONEL X-750
60	1	Handle		2139937-01		Ductile Iron ASTM A536 Grade 65-45-12
70	1	Stem Packing Retainer		J024324-008		316 SS
90	1	Stem Seal Assembly		J024882-601		Teflon/Elgiloy
100	1	Retainer Snap Ring		J090066-162		PH 15-7 Mo
110	4	Stud		219066-07-02-21	219066-08-02-61	ASTM A193 B7M/Zinc-Plated
120	1	Lube Fitting		005929-18		Steel
130	1	Vent Fitting		2726258-01		Steel
160	1	Bonnet Seal	1, 6	J005520-234		Buna-N
		(See Note 2)	2, 8	J005521-234		FKM
			5, 7	2712425-37		HNBR
			9	2788035-08		AFLAS
180	1	Handle Seal		J005526-219		Buna-N
200	4	Nut		2709000-07-11	2709000-08-11	ASTM A194 2HM/Zinc-Plated

Notes: 1. CF8M is ASTM A351 Grade CF8M annealed. 316 SS is AISI Type 316 SS annealed.
2. These parts are keyed to the assembly part number. "Seat insert/seal" code numbers indicated.

SERIES DT GATE VALVES – ASME CLASSES 600, 900, AND 1500

2-1/2" (65 mm) Full Port NACE Compliant

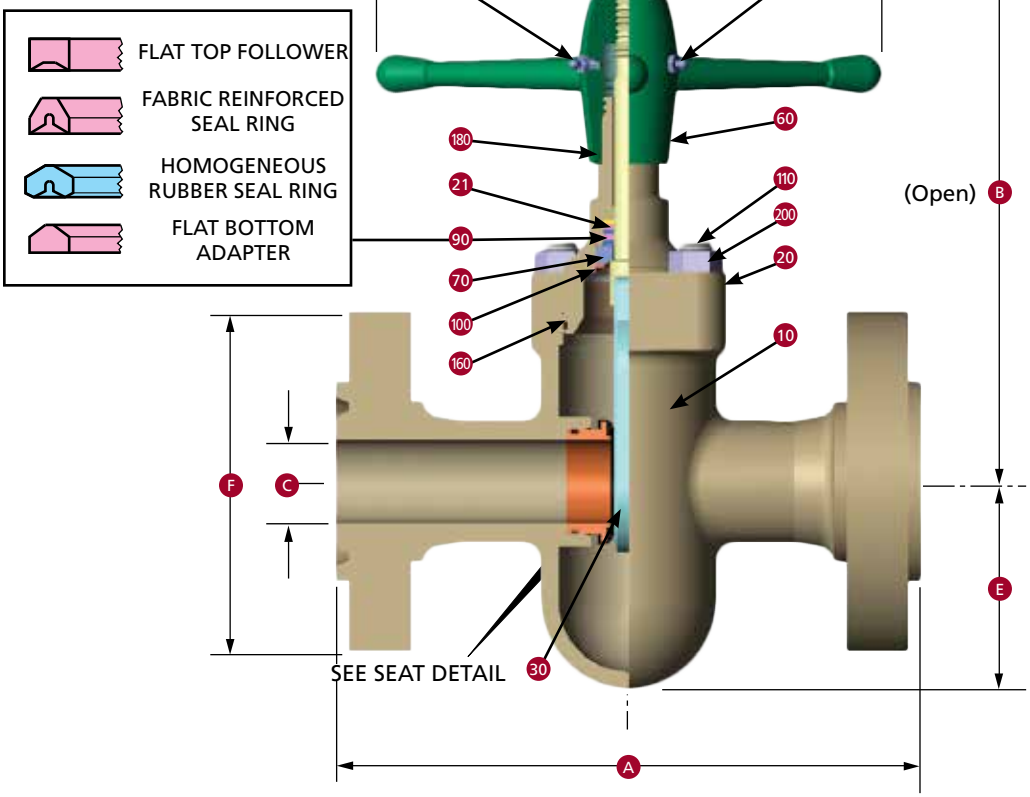

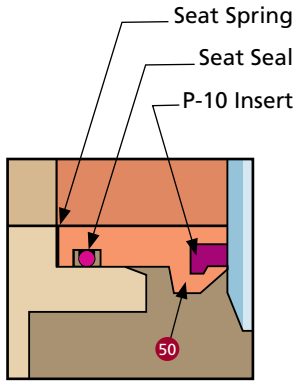

SEAT ASSEMBLY DETAIL
P-10
SEAT SPRING AND SEAL
PART OF SEAT ASSEMBLY

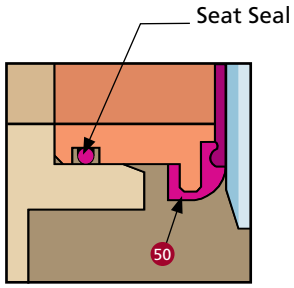

SEAT ASSEMBLY DETAIL
PC BUNA, FKM, HNBR
SEAT SEAL
PART OF SEAT ASSEMBLY

Dimensional Data and Weights

Dimension		Valve Size: 2-1/2" (65 mm) FP		
		ASME Class 600	ASME Class 900	ASME Class 1500
A	Threaded	-	8.75 (222)	8.75 (222)
	Flanged – RF	13.00 (330)	16.50 (419)	16.50 (419)
	Flanged – RTJ	13.12 (333)	16.62 (422)	16.62 (422)
B	(Open) - Bronze	18.18 (462)	18.18 (462)	18.18 (462)
	- Stainless Steel	18.18 (462)	19.42 (493)	19.42 (493)
C	(Seat Bore)	2.56 (65)	2.56 (65)	2.56 (65)
D		14.75 (375)	14.75 (375)	14.75 (375)
E		6.12 (155)	6.38 (162)	6.38 (162)
F	Flange OD	7.50 (191)	9.62 (244)	9.62 (244)
	Flange Bolts (Qty., Size: in.)	8 – 3/4	8 – 1	8 – 1
	Ring Number (RTJ)	R-26	R-27	R-27
Weight lb (kg)				
	Threaded	-	57 (26)	57 (26)
	Flanged	77 (35)	110 (50)	110 (50)

Working Pressure (psi)

End Connection	Material	ASME Class 600	ASME Class 900	ASME Class 1500
Threaded	Bronze	-	2220	3705
	Stainless Steel	-	2220	3705
Flanged	Bronze	1480	2220	3705
	Stainless Steel	1440	2160	3600

ASSEMBLY PART NUMBER

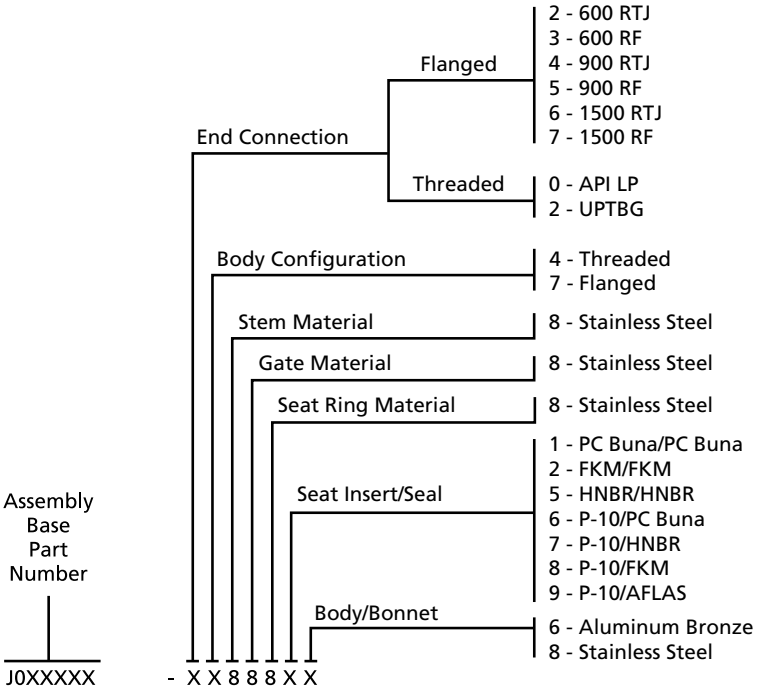

Parts List

Key No.	Qty.	Description	Valve Size: 2-1/2" (65 mm) FP ASME Class 600	Valve Size: 2-1/2" (65 mm) FP ASME Class 900/ 1500	Material Specification (See Note 1)
		Assembly Base Part Number	J025000	J025001/J025002	
10	1	Body	Consult Cameron for Body Part Numbers		Aluminum Bronze ASTM B148 Alloy 955 Stainless Steel CF8M
20	1	Bonnet — Aluminum Bronze	2139015-11	2139020-11	Aluminum Bronze ASTM B148 Alloy 955
		Bonnet — Stainless Steel	2139015-12	2061920-01	Stainless Steel CF8M
21	1	Stem Bushing (f/SS Bonnet)	J024676-060		Bronze ASTM B150 Alloy C63000
30	1	Gate — 1, 2, 5	2060265-01		Stainless Steel CF8M
		(See Note 2) — 6, 7, 8, 9	2060266-01		
40	1	Stem — f/ Aluminum Bronze Valve	2060256-02		316 SS
		Stem — f/ Stainless Steel Valve	2060256-02	2061921-01	
50	2	Seat Assembly — 1	2061588-02		Ring: CF8M; Elastomer: Buna-N, Peroxide-Cured
		(See Note 2) — 2	2061589-02		Ring: CF8M; Elastomer: FKM
		5	Consult Cameron for Seat Assembly Part Numbers		Ring: CF8M; Elastomer: HNBR
		6	2061590-02		Ring: CF8M; Insert: PEEK; Seal: Buna-N Spring: INCONEL X-750
		7	Consult Cameron for Seat Assembly Part Numbers		Ring: CF8M; Insert: PEEK; Seal: HNBR Spring: INCONEL X-750
		8	Consult Cameron for Seat Assembly Part Numbers		Ring: CF8M; Insert: PEEK; Seal: FKM Spring: INCONEL X-750
		9	Consult Cameron for Seat Assembly Part Numbers		Ring: CF8M; Insert: PEEK; Seal: AFLAS Spring: INCONEL X-750
60	1	Handle	2227862-01		Ductile Iron ASTM A536 Grade 65-45-12
70	1	Stem Packing Retainer	2060259-08		316 SS
90	1	Stem Seal Assembly	J024882-603		Teflon/Elgiloy
100	1	Retainer Snap Ring	J090066-162		PH 15-7 Mo
110	4	Stud	219066-07-02-21	219066-09-03-21	ASTM A193 B7M/Zinc-Plated
120	1	Lube Fitting	005929-18		Steel
130	1	Vent Fitting	2726258-01		Steel
160	1	Bonnet Seal — 1, 6	J005520-239		Buna-N
		(See Note 2) — 2, 8	J005521-239		FKM
		5, 7	2712425-08		HNBR
		9	2788035-08		AFLAS
180	1	Handle Seal	J005526-221		Buna-N
200	4	Nut	2709000-07-11	2709000-09-11	ASTM A194 2HM/Zinc-Plated

Notes: 1. CF8M is ASTM A351 Grade CF8M annealed. 316 SS is AISI Type 316 SS annealed.
2. These parts are keyed to the assembly part number. "Seat insert/seal" code numbers indicated.

SERIES DT GATE VALVES – ASME CLASSES 600, 900, AND 1500

3" (80 mm) Full Port NACE Compliant

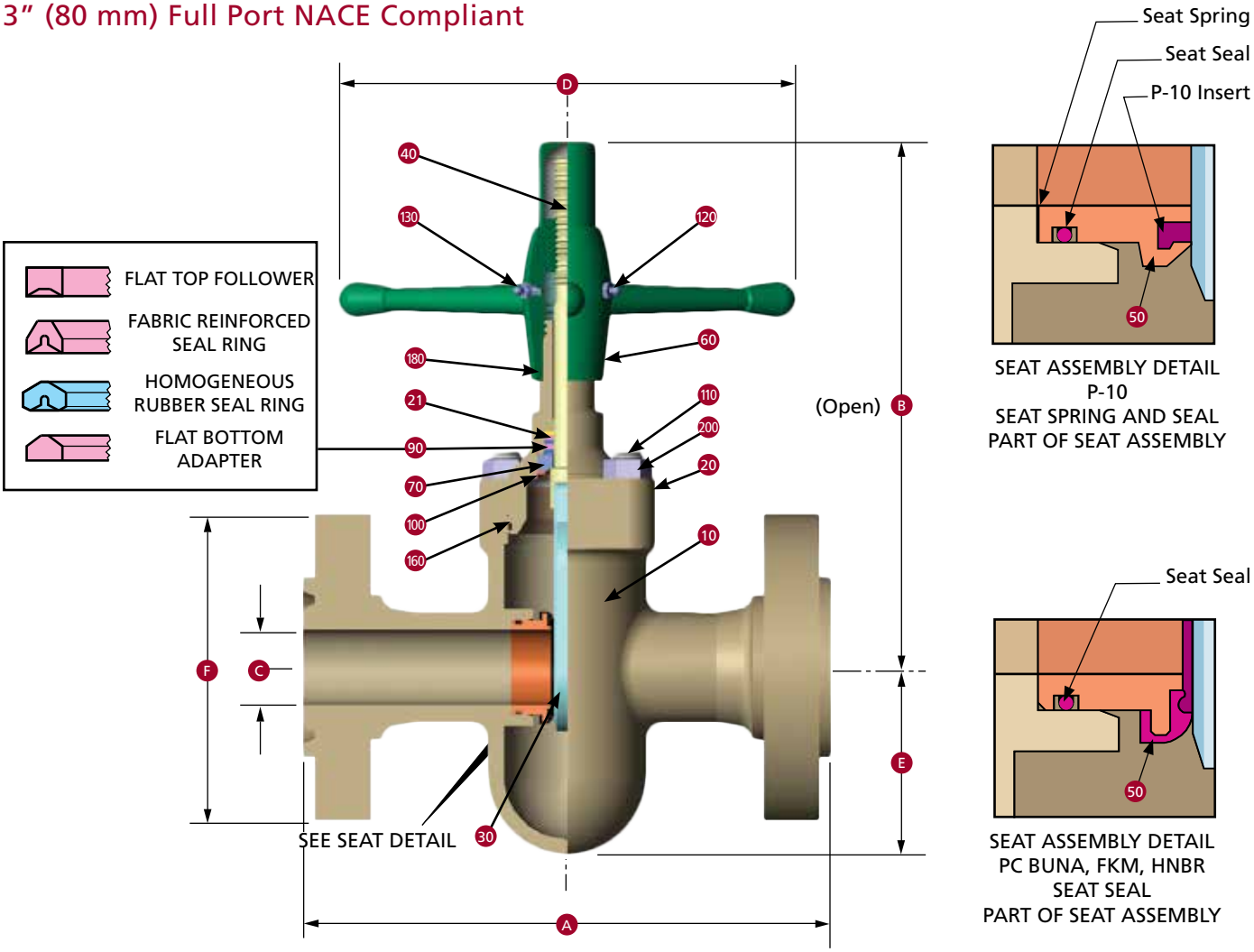

Dimensional Data and Weights

Dimension		Valve Size: 3" (80 mm) FP		
		ASME Class 600	ASME Class 900	ASME Class 1500
A	Threaded	-	9.69 (246)	-
	Flanged – RF	14.00 (356)	15.00 (381)	18.50 (470)
	Flanged – RTJ	14.12 (359)	15.12 (384)	18.62 (373)
B	(Open)	19.50 (495)	19.50 (495)	20.31 (516)
C	(Seat Bore)	3.12 (79)	3.12 (79)	3.12 (79)
D		14.75 (375)	14.75 (375)	18.00 (457)
E		6.81 (173)	6.94 (176)	7.15 (182)
F	Flange OD	8.25 (210)	9.50 (241)	10.50 (267)
	Flange Bolts (Qty., Size: in.)	8 – 3/4	8 – 7/8	8 – 1-1/8
	Ring Number (RTJ)	R-31	R-31	R-35
Weight lb (kg)				
	Threaded	-	75 (34)	-
	Flanged	100 (45)	125 (57)	185 (84)

Working Pressure (psi)

End Connection	Material	ASME Class 600	ASME Class 900	ASME Class 1500
Threaded	Bronze	-	2220	-
Flanged	Bronze	1480	2220	3705

ASSEMBLY PART NUMBER

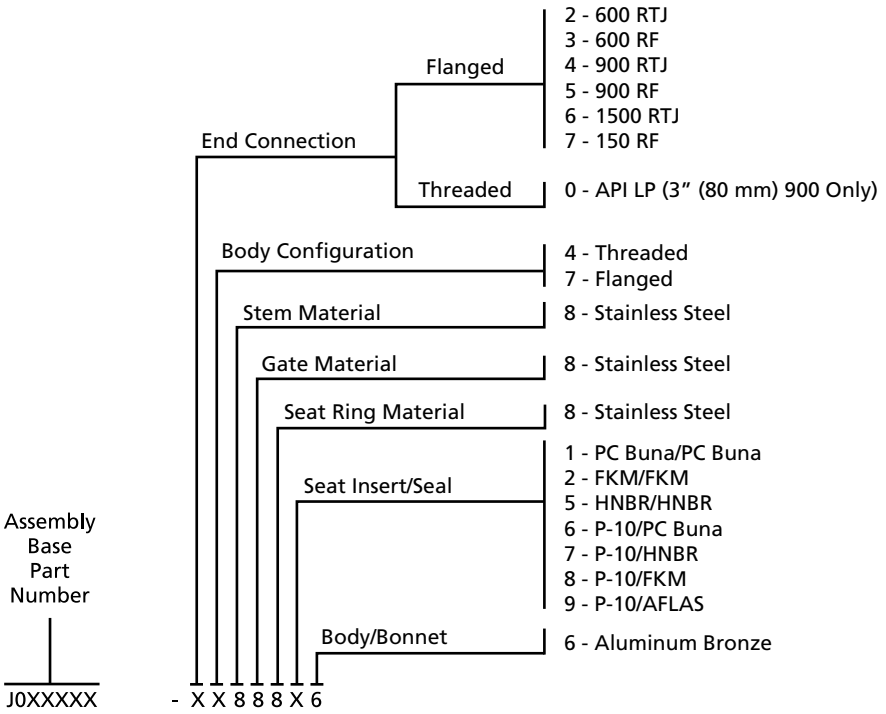

Parts List

Key No.	Qty.	Description		Valve Size: 3" (80 mm) FP ASME Class 600	ASME Class 900	ASME Class 1500	Material Specification (See Note 1)
		Assembly Base Part Number		J025003	J025004	J025005	
10	1	Body		Consult Cameron for Body Part Numbers			Aluminum Bronze ASTM B148 Alloy 955
20	1	Bonnet		J024624-006		J024642-006	Aluminum Bronze ASTM B148 Alloy 955
30	1	Gate	1, 2,5	J024621-008			Stainless Steel CF8M
		(See Note 2)	6, 7, 8, 9	J024623-008			
40	1	Stem		J024620-008		J024820-008	316 SS
50	2	Seat Assembly	1	2061588-03			Ring: CF8M; Elastomer: Buna-N
		(See Note 2)	2	2061589-03			Ring: CF8M; Elastomer: FKM
			5	Consult Cameron for Seat Assembly Part Numbers			Ring: CF8M; Elastomer: HBNR
			6	2061590-03			Ring: CF8M; Insert: PEEK; Seal: Buna-N Spring: INCONEL X-750
			7	Consult Cameron for Seat Assembly Part Numbers			Ring: CF8M; Insert: PEEK; Seal: HPNR Spring: INCONEL X-750
			8	Consult Cameron for Seat Assembly Part Numbers			Ring: CF8M; Insert: PEEK; Seal: FKM Spring: INCONEL X-750
			9	Consult Cameron for Seat Assembly Part Numbers			Ring: CF8M; Insert: PEEK; Seal: AFLAS Spring: INCONEL X-750
60	1	Handle		2139931-01		2139932-01	Ductile Iron ASTM A536 Grade 65-45-12
70	1	Stem Packing Retainer		2060259-08			316 SS
90	1	Stem Seal Assembly		J024882-603			Filled PTFE/Elgiloy
100	1	Retainer Snap Ring		J090066-162			PH 15-7 Mo
110	4	Stud		219066-09-03-21		219066-10-03-61	ATM A193 B7M/Zinc-Plated
120	1	Lube Fitting		005929-18			Steel
130	1	Relief Fitting		2726258-01			Steel
160	1	Bonnet Seal	1, 6	J005520-244			Buna-N
		(See Note 2)	2, 8	J005521-244			FKM
			5, 7	Consult Cameron for Bonnet Seal Part Numbers			HBNR
			9	2788035-07			AFLAS
180	1	Handle Seal		J005526-221			Buna-N
200	4	Nut		2709000-09-11		2709000-10-11	ASTM A194 2HM/Zinc-Plated

Notes: 1. CF8M is ASTM A351 Grade CF8M annealed. 316 SS is AISI Type 316 SS annealed.
2. These parts are keyed to the assembly part number. "Seat insert/seal" code numbers indicated.

SERIES DT GATE VALVES – ASME CLASSES 600, 900, AND 1500

4" (100 mm) Full Port NACE Compliant

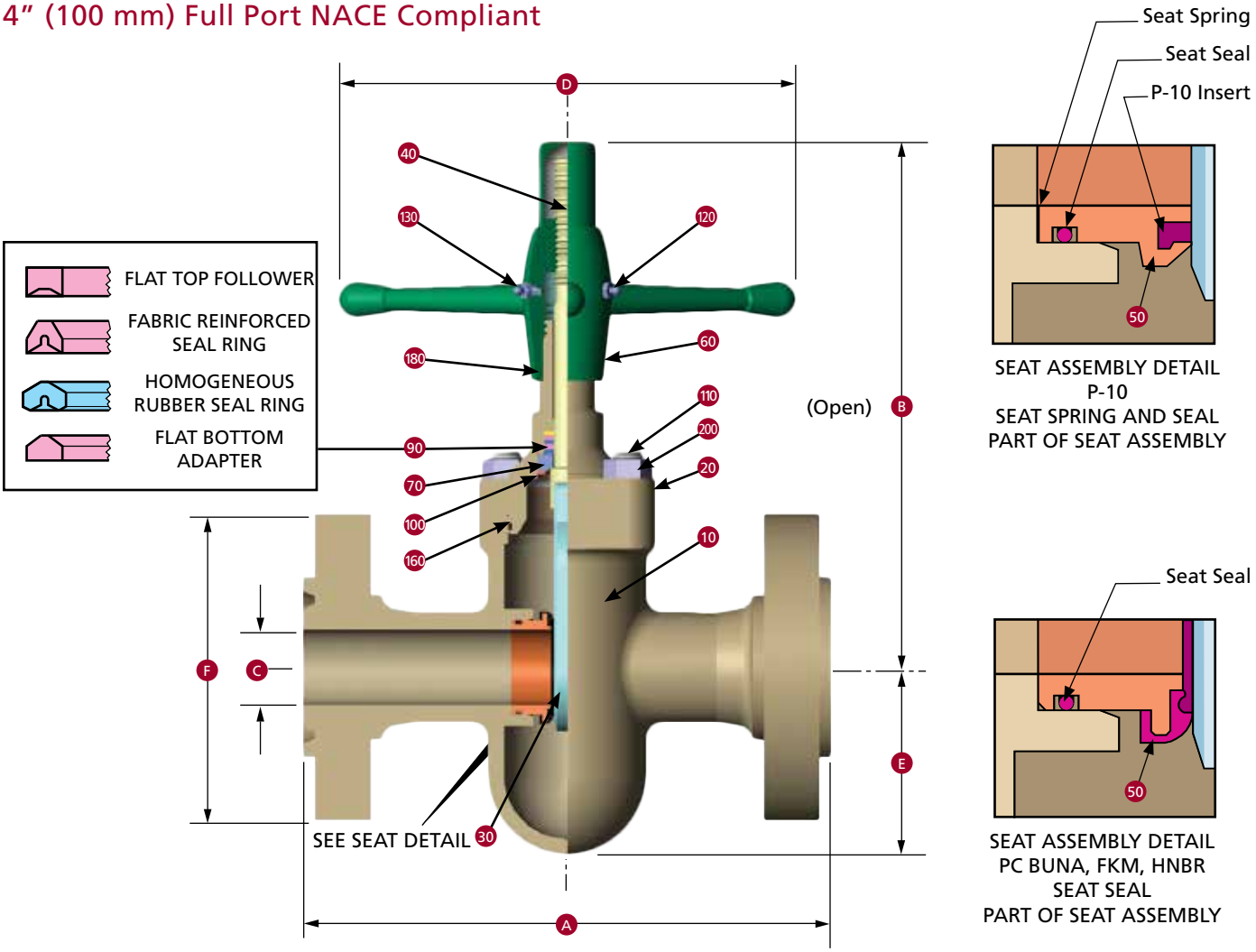

Dimensional Data and Weights

Dimension		Valve Size: 4" (100 mm) FP		
		ASME Class 600	ASME Class 900	ASME Class 1500
A	Flanged – RF	17.00 (432)	18.00 (457)	21.50 (546)
	Flanged – RTJ	17.12 (435)	18.12 (460)	21.62 (549)
B	(Open)	24.08 (612)	24.08 (612)	24.38 (619)
C	(Seat Bore)	4.06 (103)	4.06 (103)	4.06 (103)
D		23.00 (584)	23.00 (584)	23.00 (584)
E		9.00 (229)	9.12 (232)	9.41 (239)
F	Flange OD	10.75 (273)	11.50 (292)	12.25 (311)
	Flange Bolts (Qty., Size: in.)	8 – 7/8	8 – 1-1/8	8 – 1-1/4
	Ring Number (RTJ)	R-37	R-37	R-39
Weight lb (kg)				
	Flanged	170 (77)	215 (98)	295 (134)

Working Pressure (psi)

End Connection	Material	ASME Class 600	ASME Class 900	ASME Class 1500
Flanged	Bronze	1480	2220	3705

ASSEMBLY PART NUMBER

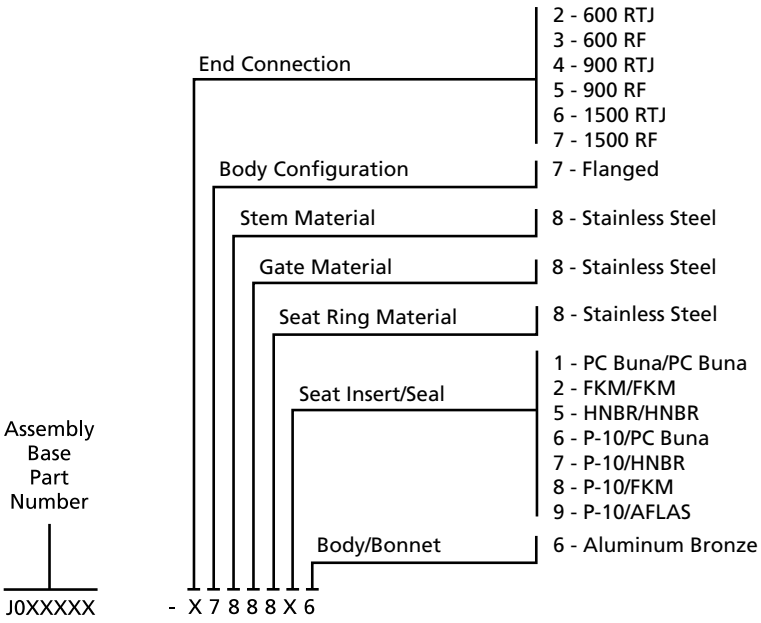

Parts List

Key No.	Qty.	Description		Valve Size: 4" (100 mm) FP ASME Class 600	ASME Class 900	ASME Class 1500	Material Specification (See Note 1)
		Assembly Base Part Number		J025006	J025007	J025008	
10	1	Body – 4"		Consult Cameron for Body Part Numbers			Aluminum Bronze ASTM B148 Alloy 955
20	1	Bonnet		J024711-006	J024712-006	J024713-006	Aluminum Bronze ASTM B148 Alloy 955
30	1	Gate	1, 2, 5	J024719-008		J024721-008	Stainless Steel CF8M
		(See Note 2)	6, 7, 8, 9	J024720-008		J024722-008	
40	1	Stem		J024717-008		J024718-008	316 SS – 600 and 900 Only; XM-19 1500 Only
50	2	Seat Assembly	1	2061588-04			Ring: CF8M; Elastomer: Buna-N
		(See Note 2)	2	2061589-04			Ring: CF8M; Elastomer: FKM
			5	Consult Cameron for Seat Assembly Part Numbers			Ring: CF8M; Elastomer: HBNR
			6	2061590-04			Ring: CF8M; Insert: PEEK; Seal: Buna-N Spring: INCONEL X-750
			7	Consult Cameron for Seat Assembly Part Numbers			Ring: CF8M; Insert: PEEK; Seal: HNBR Spring: INCONEL X-750
			8	Consult Cameron for Seat Assembly Part Numbers			Ring: CF8M; Insert: PEEK; Seal: FKM Spring: INCONEL X-750
			9	Consult Cameron for Seat Assembly Part Numbers			Ring: CF8M; Insert: PEEK; Seal: AFLAS Spring: INCONEL X-750
60	1	Handle		2139933-01			Ductile Iron ASTM A536 Grade 65-45-12
70	1	Stem Packing Retainer		J024716-008			316 SS
90	1	Stem Seal Assembly		J024882-604			Teflon/Elgiloy
100	1	Retainer Snap Ring		J090066-175			PH 15-7 Mo
110	4	Stud		219066-08-02-61	219066-09-03-21	219066-11-04-21	ASTM A193 B7M/Zinc-Plated
120	1	Lube Fitting		005929-18			Steel
130	1	Relief Fitting		2726258-01			Steel
160	1	Bonnet Seal	1, 6	J005520-254			Buna-N
		(See Note 2)	2, 8	J005521-254			FKM
			5, 7	Consult Cameron for Bonnet Seal Part Numbers			HBNR
			9	2788035-10			AFLAS
180	1	Handle Seal		J005526-223			Buna-N
200	4	Nut		2709000-08-11	2709000-09-11	2709000-11-11	ASTM A194 2HM/Zinc-Plated

Notes: 1. CF8M is ASTM A351 Grade CF8M annealed. 316 SS is AISI Type 316 SS annealed.
2. These parts are keyed to the assembly part number. "Seat insert/seal" code numbers indicated.

SERIES DT GATE VALVES – ASME CLASS 900

6" (150 mm) Full Port NACE Compliant

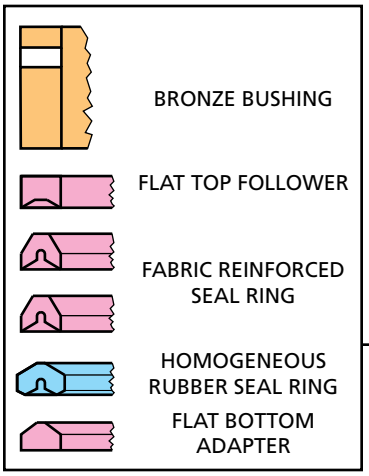

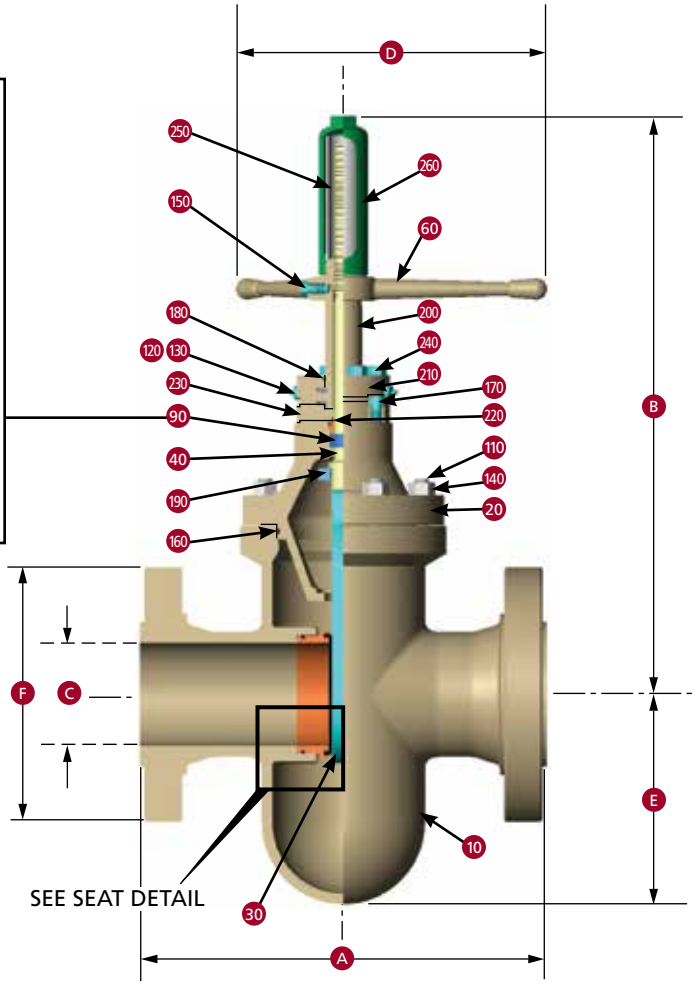

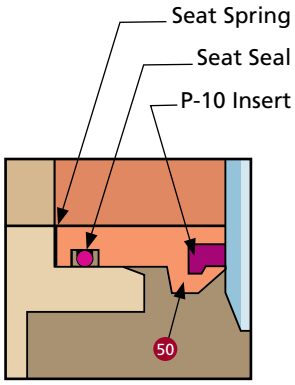

SEAT ASSEMBLY DETAIL
P-10
SEAT SPRING AND SEAL
PART OF SEAT ASSEMBLY

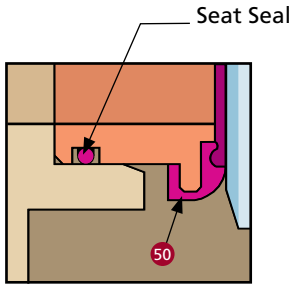

SEAT ASSEMBLY DETAIL
PC BUNA, FKM, HNBR
SEAT SEAL
PART OF SEAT ASSEMBLY

Dimensional Data and Weights

Dimension		Valve Size: 6" (150 mm) FP ASME Class 900
A	Flanged – RF	24.00 (610)
	Flanged – RTJ	24.12 (613)
B	(Open)	33.85 (860)
C	(Seat Bore)	6.06 (154)
D		24.00 (610)
E		12.38 (314)
F	Flange OD	15.00 (381)
	Flange Bolts (Qty., Size: in.)	12 – 1-1/8
	Ring Number (RTJ)	R-45
Weight lb (kg)		
	Flanged	Consult Cameron

Working Pressure (psi)

End Connection	Material	ASME Class 900
Flanged	Bronze	2220

ASSEMBLY PART NUMBER

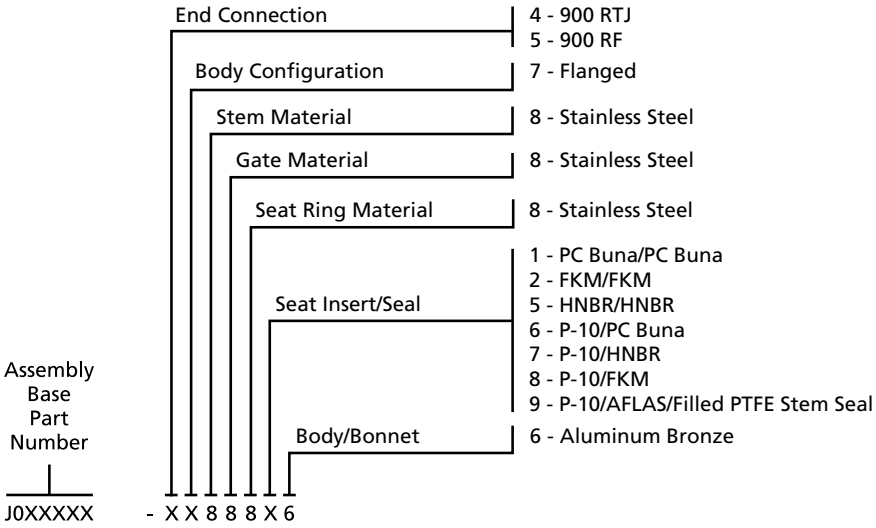

Parts List

Key No.	Qty.	Description		Valve Size: 6" (150 mm) FP ASME Class 900	Material Specification (See Note 1)
		Assembly Base Part Number		J025150	
10	1	Body	6" (150 mm) RF – AL BRZ	2227657-00-56	Aluminum Bronze ASTM B148 Alloy 955
			RTJ – AL BRZ	2227657-00-46	
20	1	Bonnet	AL BRZ	2227661-06	Aluminum Bronze ASTM B148 Alloy 955
30	1	Gate	1, 2, 5	2227658-08	Stainless Steel CF8M
		(See Note 2)	6, 7, 8, 9	2227964-08	
40	1	Stem		2227666-08	316 SS
50	2	Seat Assembly	1	2061588-06	Ring: CF8M; Elastomer: Buna-N
		(See Note 2)	2	2061589-06	Ring: CF8M; Elastomer: FKM
			5	Consult Cameron for Part Number	Ring: CF8M; Elastomer: HNB
			6	2061590-06	Ring: CF8M; Insert: PEEK; Seal: Buna-N Spring: INCONEL X-750
			7	Consult Cameron for Part Number	Ring: CF8M; Insert: PEEK; Seal: HNBR; Spring: INCONEL X-750
			8	Consult Cameron for Part Number	Ring: CF8M; Insert: PEEK; Seal: FKM; Spring: INCONEL X-750
			9	Consult Cameron for Part Number	Ring: CF8M; Insert: PEEK; Seal: AFLAS; Spring: INCONEL X-750
60	1	Handle		2227656-01	Ductile Iron ASTM A536 Grade 65-45-12
90	1	Stem Seal Assembly	1, 6	J021706-001	Buna-N
		(See Note 2)	2, 8	J015853-006	FKM
			5, 7	J015853-008	HNBR
			9	Consult Cameron for Part Number	PTFE
110	8	Stud		2119066-09-04-21	ASTM A193 B7M/Zinc-Plated
120	1	Lube Fitting		005929-18	Steel
130	1	Relief Fitting		J051971	Steel
140	8	Nut		2709000-09-11	ASTM A194 2HM/Zinc-Plated
150	1	Screw – Handle		J014832	Steel AISI C1018
160	1	Body Seal	1, 6	J005520-367	Buna-N
		(See Note 2)	2, 8	J005521-367	FKM
			5, 7	2738507-15	HNBR
			9	2788035-11	AFLAS
170	4	Screw – Retainer		702589-14-00-16	Alloy Steel
180	1	Stem Screw Seal		J005526-228	Buna-N on 900
190	1	Downstop Ring		J015848	316 SS
200	1	Stem Screw with Bearings		J023888	Stem Screw with Steel AISI C1018 Bearings: Hardened Steel Needle Thrust Bearings
210	1	Housing		J015332	Steel AISI C1018
220	1	Secondary Seal	1, 6	J005526-216	Buna-N
		(See Note 2)	2, 8	J005531-216	FKM
			5, 7, 9	2738507-09	HNBR
230	1	Retainer		J015330-101	Steel AISI C1018
240	4	Screw – Housing		J056511-32056	ASTM A193 B7M/Zinc-Plated
250	1	Tube		J019160	Clear Acrylic
260	1	Stem Cap		J019161	Ductile Iron ASTM A536 Grade 65-45-12

Notes: 1. CF8M is ASTM A351 Grade CF8M annealed. XM-19 is ASTM A479 Type XM-19 hot rolled.
2. These parts are keyed to the assembly part number. "Seat insert/seal" code numbers indicated.

Services for Valves and Actuation

WE BUILD IT. WE BACK IT.

Startup and Commissioning

Our experts understand that each project is unique. That's why Cameron's services help facilitate commissioning and start-up activities.

- Integrated solutions, onsite or at our global service centers
- Increased equipment and product performance
- The shortest possible trouble-free startup for your critical assets

Spare Parts and Asset Management

Cameron offers the assets and expertise to cover all aspects of valve management.

- Full inventory of quality exact OEM parts and spares
- Complete asset risk and criticality assessments
- Comprehensive inventory of your assets, including a complete recommended spare valves and parts list

Operational Support

Cameron's ability to address valve requirements in the field is a reflection of our commitment to life-of-asset support.

- Innovative asset management solutions
- Trouble-free installation, startup and operations
- Support from commission to operation – extending through all phases of a valve's life cycle
- Extensive inventory of spare valves and parts

Cameron's site management team helps mitigate the risk of project delays by identifying issues in the construction process prior to valve installation to ensure valve integrity.

Trademark Information

DEMCO is a registered trademark of Cameron.

This document contains references to registered trademarks or product designations, which are not owned by Cameron.

Trademark	Owner
ENDURO-BOND	Energy & Environmental Services, Inc.
TEFLON	E.I. DuPont De Nemours & Company

CERTIFICATIONS

American Bereau of Shipping

WARNING: Failure to comply with Cameron operations and maintenance manuals, safety alerts, engineering bulletins and other documentation and failure to use OEM parts can adversely affect performance and can cause serious injury or death and property damage.